VHS-45 Extruded Heat Sink

Features

- Designed for half-brick converters
- Keeps converters cool with natural convection or forced air
- Includes mounting screws and washers
- Black anodized finish
- Material: extruded 6063P5 aluminum

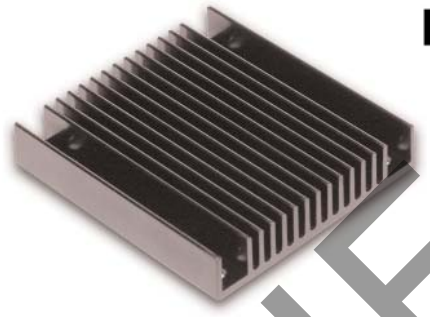

Mechanical Data

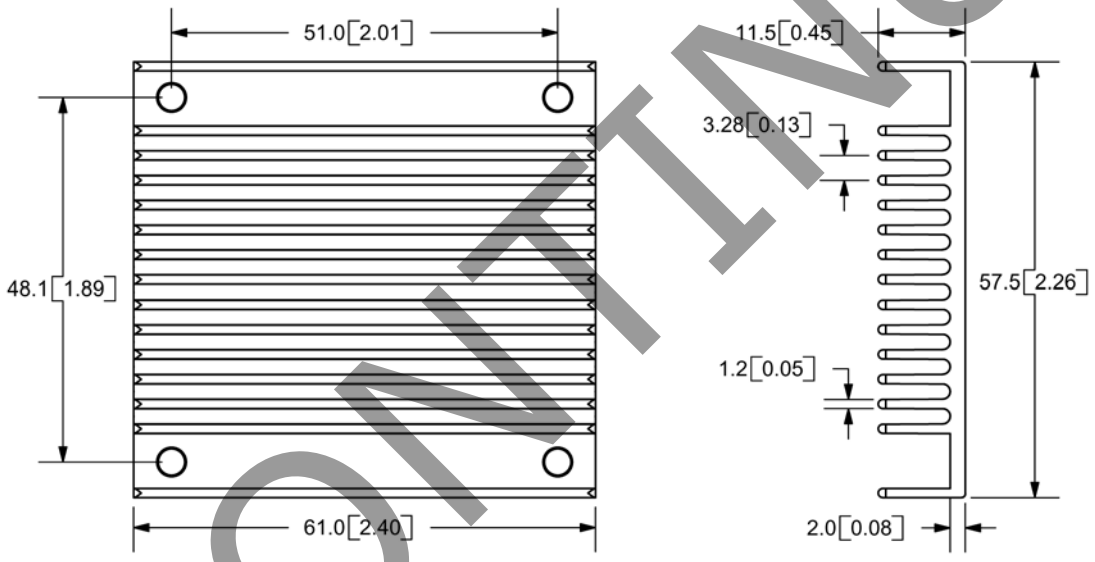

Weight: 1.6oz (45.36g) net
Mounting Hardware: 4xM3x12mm screw with washer

Thermal Data

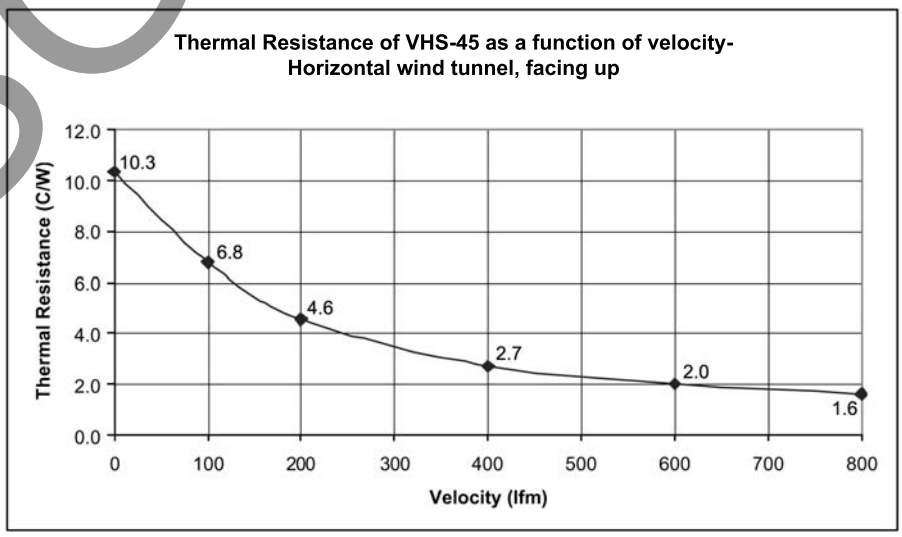

DISCONTINUED