CUI INC
a bel group

MODEL: SMI-CN-3L-W | **DESCRIPTION:** CHINA BLADE

FEATURES
- level VI efficiency
- China interchangeable blade
- compatible with SMI10-USB series

RoHS

MECHANICAL DRAWING

units: mm
color: white(C-62)

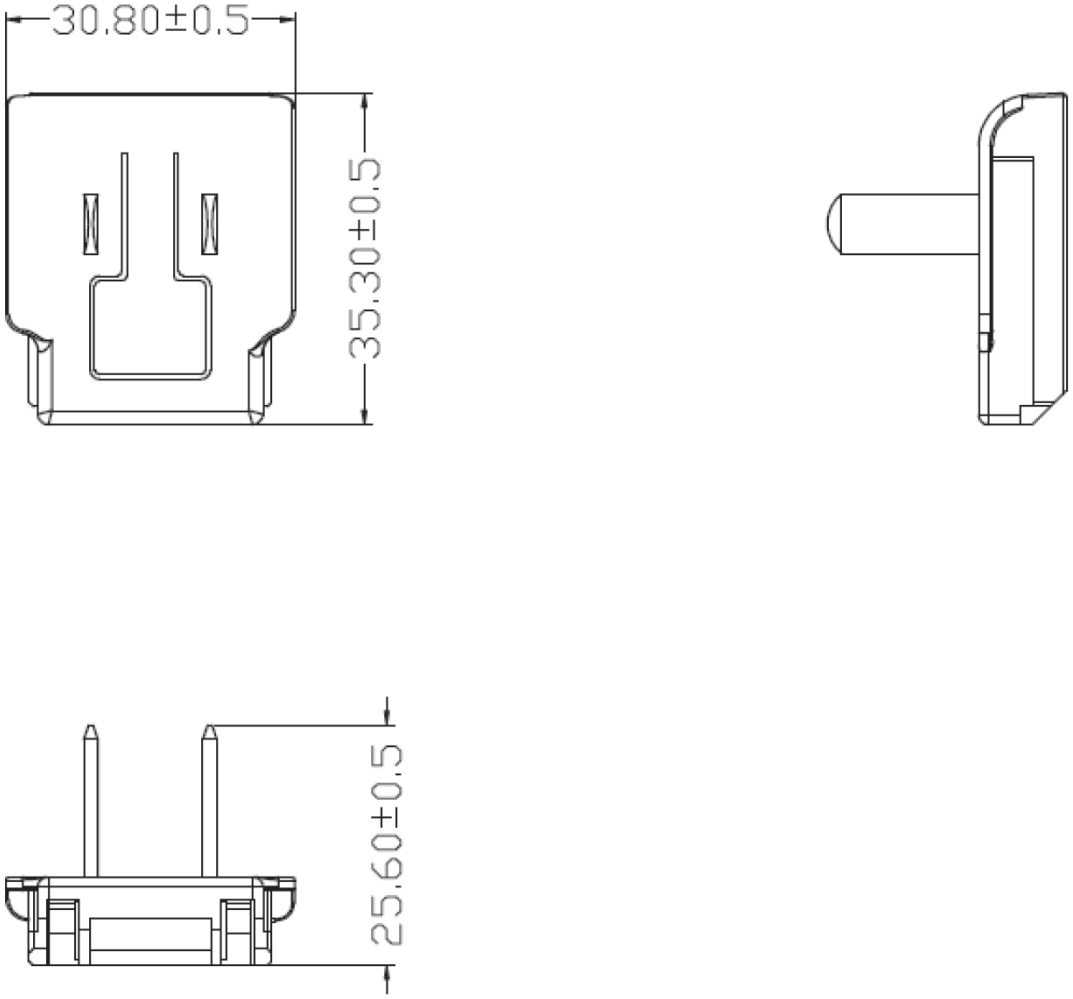

REVISION HISTORY

rev.	description	date
1.0	initial release	05/21/2018
1.01	added packaging	10/26/2018
1.02	added barcode label to individual packaging	12/20/2018
1.03	updated image	07/28/2020
1.04	packaging removed	12/15/2020

The revision history provided is for informational purposes only and is believed to be accurate.

CUI INC
a bel group

Headquarters
20050 SW 112th Ave.
Tualatin, OR 97062
800.275.4899

Fax 503.612.2383
cui.com
techsupport@cui.com

This device complies with part 15 of the FCC Rules. Operation is subject to the following two conditions:
(1) This device may not cause harmful interference, and
(2) this device must accept any interference received, including interference that may cause undesired operation.

CUI offers a one (1) year limited warranty. Complete warranty information is listed on our website.

CUI reserves the right to make changes to the product at any time without notice. Information provided by CUI is believed to be accurate and reliable. However, no responsibility is assumed by CUI for its use, nor for any infringements of patents or other rights of third parties which may result from its use.

CUI products are not authorized or warranted for use as critical components in equipment that requires an extremely high level of reliability. A critical component is any component of a life support device or system whose failure to perform can be reasonably expected to cause the failure of the life support device or system, or to affect its safety or effectiveness.