DISCONTINUED

RE19H

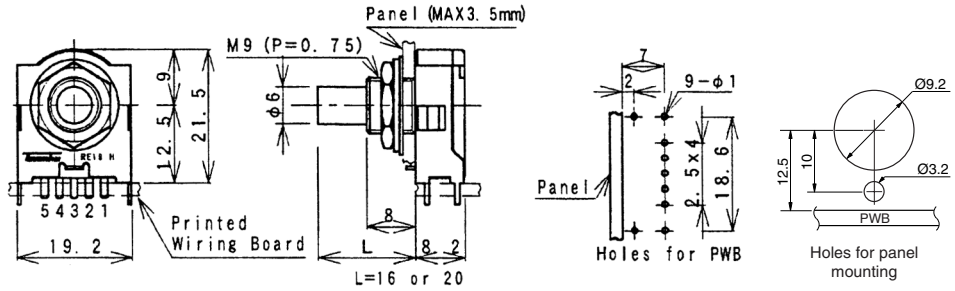

RE19V

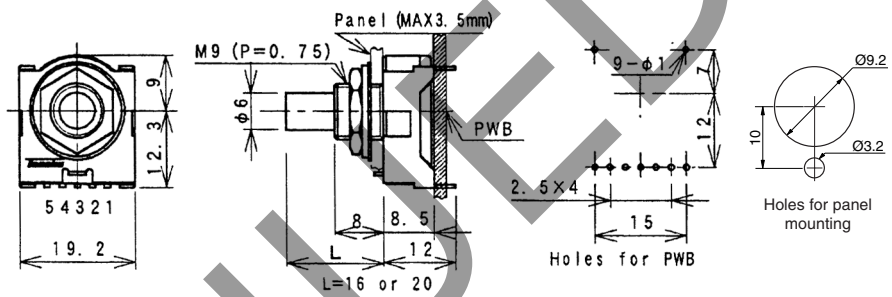

RE19C

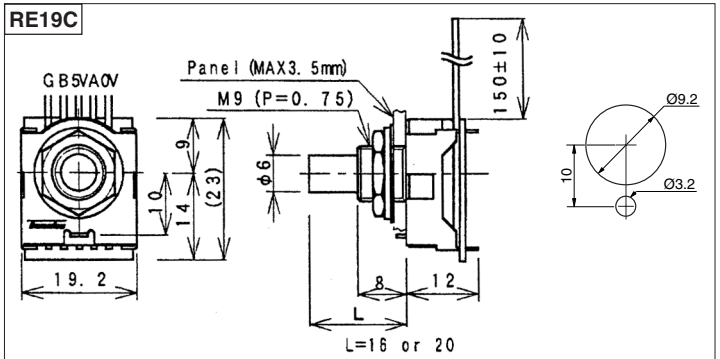

RE19F

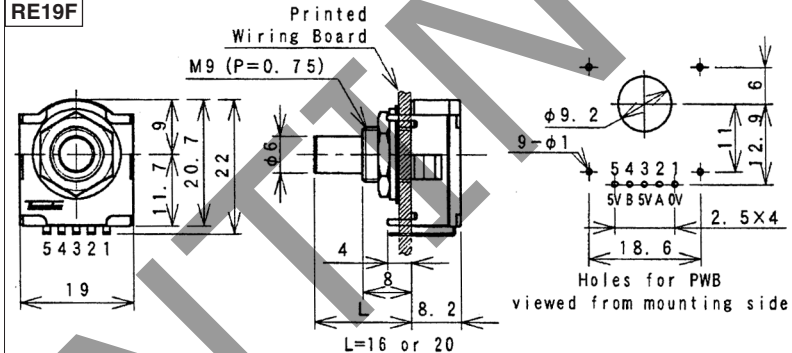

Connections

Number		Functions
5*	5V	+5V Powersupply
4	B	B Phase output
3*	5V	+5V Powersupply
2	A	A Phase output
1	0V	0V Common Return
	G	Frame Ground/Earth

*Please connect terminals 3 and 5 to 5V power supply.

SPECIFICATIONS

ELECTRICAL

1. Input Power: 5.0 VDC ±10% @ 20mA
2. Output Voltage: H = Vcc- 0.5V
   L ≤ 0.4V
3. Resolution: 25/50 PPR
3. Output Type: TTL Compatible
4. Max. Freq. Response: 500 Hz

MECHANICAL

1. Max Shaft Load, radial: 5.0 kgf
   axial: 5.0 kgf
2. Rotational Angle: 360° continuous
3. Click Torque: 30~70 gf•cm
4. Rotational Life: 1,000,000 cycles

ENVIRONMENTAL

1. Operating Temp: 0° to +70° C
2. Storage Temp: -20° to +80° C
3. Humidity: ≤85% RH, no condensation
4. Vibration: 10~55 Hz, 1.5 mm, 2 hrs
5. Shock: 50G, 6ms, 3 axes, 3 reps

OUTPUT CIRCUIT

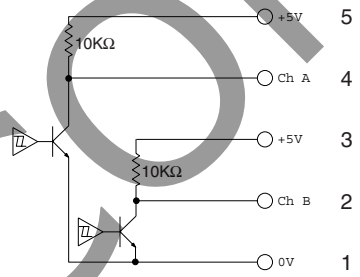

OUTPUT WAVEFORM

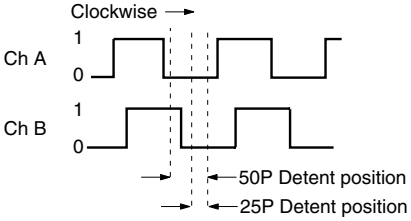

ORDERING INSTRUCTIONS

RE19□□□□□□□R□

- N = Not waterproof
  P = Waterproof
- Body Type:
  C = Cable type
  F = Front mounting
  H = Horizontal
  V = Vertical
- Resolution:
  25 = 25 Cycles
  50 = 50 Cycles
- Detent:
  C = Click
  Blank = No Click
- Shaft Length:
  16 = 16mm
  20 = 20mm
  28 = 28mm
- Output:
  O = Open Collector
  R = pull up 4.7 kΩ

CUI Devices
6405 SW Rosewood St, Suite C
Lake Oswego, OR 97035
www.cuidevices.com

DRAWN BY	UPDATED	CHECKED	RELEASED
JRH	09/01/20	09/01/20	

PART NO. RE19XXXXXXXRX REV.