CUI INC
a bel group

SERIES: PSK-S25D | DESCRIPTION: AC-DC POWER SUPPLY

FEATURES

- universal input (85~264 Vac)
- -40~85°C operating range
- over voltage/current protection
- 4,000 Vac input/output isolation voltage
- board/chassis/DIN-Rail configurations
- CISPR32/EN55032 Class B
- UL/EN/IEC 62368-1 certified

MODEL

MODEL	output voltage (Vdc)	output current min (A)	output current max (A)	output power max (W)	ripple and noise[1] max (mVp-p)	efficiency[2] typ (%)
PSK-S25D-3[1,2]	3.3	0	4.10	13.5	100	74
PSK-S25D-5[1,3]	5	0	4.10	20.5	100	79
PSK-S25D-9[1,2,3]	9	0	2.50	22.5	100	81
PSK-S25D-12	12	0	2.10	25.2	100	83
PSK-S25D-15[1,2]	15	0	1.60	24	100	84
PSK-S25D-24[1,3]	24	0	1.10	26.4	100	85
PSK-S25D-48[2,3]	48	0	0.50	24	100	87

Notes:
1. At full load, nominal input, 20 MHz bandwidth oscilloscope, with 1 µF ceramic and 10 µF electrolytic capacitors on the output.
2. At 230 Vac input.
3. All specifications are measured at Ta=25°C, humidity <75%, nominal input voltage, and rated output load unless otherwise specified.
4. Discontinued model - board mount option.
5. Discontinued model - chassis mount option.
6. Discontinued model - DIN-rail mount option.

PART NUMBER KEY

PSK-S25D - XX - X

- PSK-S25D: Base Number
- XX: Output Voltage
- X: Mounting Style:
  "blank" = board mount
  T = chassis mount
  DIN = DIN-rail mount

DISCONTINUED

DISCONTINUED

INPUT

parameter	conditions/description	min	typ	max	units
voltage		85 100		264 370	Vac Vdc
frequency		47		63	Hz
current	at 115 Vac at 230 Vac			600 340	mA mA
inrush current	at 115 Vac at 230 Vac		20 40		A A
no load power consumption				0.5	W

OUTPUT

parameter	conditions/description	min	typ	max	units
capacitive load	3.3 Vdc output models 5 Vdc output models 9 Vdc output models 12 Vdc output models 15 Vdc output models 24 Vdc output models 48 Vdc output models			48,000 12,240 5,600 5,400 2,400 1,440 600	µF µF µF µF µF µF µF
initial set point accuracy	3.3 Vdc output models all other models		±3 ±2		% %
line regulation	at full load		±0.5		%
load regulation	from 0~100% load		±1		%
hold-up time	at 115 Vac, full load at 230 Vac, full load		10 60		ms ms
adjustability	see application notes		±10		%
switching frequency			65		kHz
temperature coefficient			±0.02		%/°C

PROTECTIONS

parameter	conditions/description	min	typ	max	units
over voltage protection	output voltage clamp 3.3, 5 Vdc output models 9 Vdc output models 12, 15 Vdc output models 24 Vdc output models 48 Vdc output models			 7.5 15 20 30 60	 Vdc Vdc Vdc Vdc Vdc
over current protection	auto recovery	140			%
short circuit protection	hiccup, continuous, auto recovery				

SAFETY & COMPLIANCE

parameter	conditions/description	min	typ	max	units
isolation voltage	input to output for 1 minute, 5 mA input to ground for 1 minute, 5 mA	4,000 2,500			Vac Vac
safety approvals	UL 62368-1, EN 62368-1, IEC 62368-1				
safety class	Class I				
conducted emissions	CISPR32/EN55032, Class B				
radiated emissions	CISPR32/EN55032, Class B				
ESD	IEC/EN61000-4-2, contact ±6 kV/ air ±8 kV, Class B				
radiated immunity	IEC/EN61000-4-3, 10 V/m, Class A				

SAFETY & COMPLIANCE (CONTINUED)

parameter	conditions/description	min	typ	max	units
EFT/burst	IEC/EN61000-4-4, ±4 kV, Class B				
surge	IEC/EN61000-4-5, line to line ±1 kV/ line to ground ±2 kV, Class B				
	IEC/EN61000-4-5, line to line ±2 kV/line to ground ±4 kV, Class B (external circuit required, see Figure 2)				
conducted immunity	IEC/EN61000-4-6, 10 Vrms, Class A				
voltage dips & interruptions	IEC/EN61000-4-11 Class B, 0%-70%				
MTBF	as per MIL-HDBK-217F at 25°C	300,000			hours
RoHS	yes				

Notes: 4. The power supply is considered a component which will be installed into final equipment. The final equipment still must be tested to meet the necessary EMC directives.

ENVIRONMENTAL

parameter	conditions/description	min	typ	max	units
operating temperature	see derating curves	-40		85	°C
storage temperature		-40		85	°C
storage humidity	non-condensing			95	%

SOLDERABILITY[5]

parameter	conditions/description	min	typ	max	units
hand soldering	for 3~5 seconds	350	360	370	°C
wave soldering	for 5~10 seconds	255	260	265	°C

Notes: 5. For board mount models only

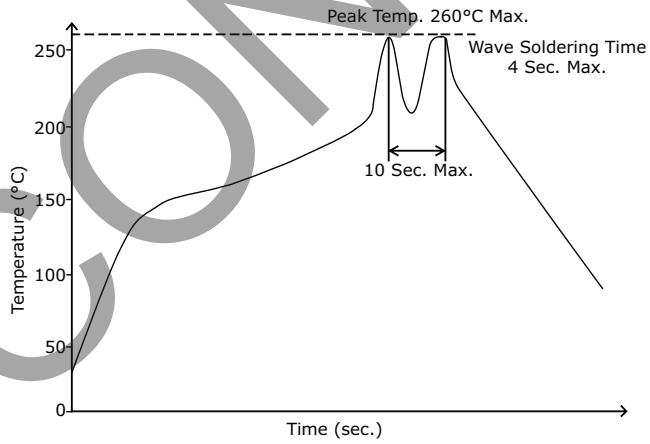

DISCONTINUED

DERATING CURVES

TEMPERATURE DERATING CURVE (85~264 Vac / 100~370 Vdc)

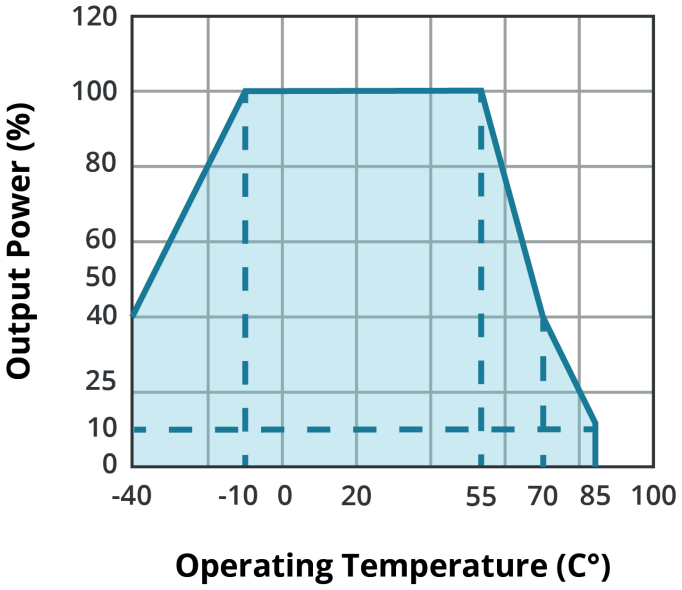

INPUT VOLTAGE DERATING CURVE (25°C)

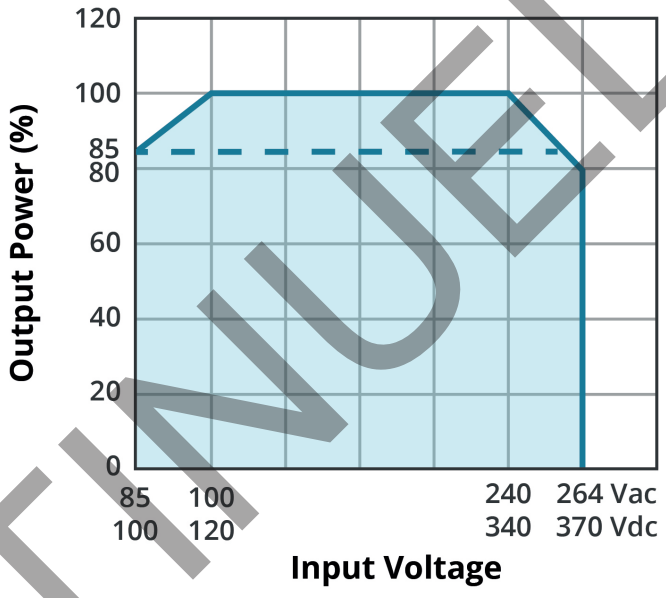

EFFICIENCY CURVES

EFFICIENCY VS INPUT VOLTAGE (Full load)

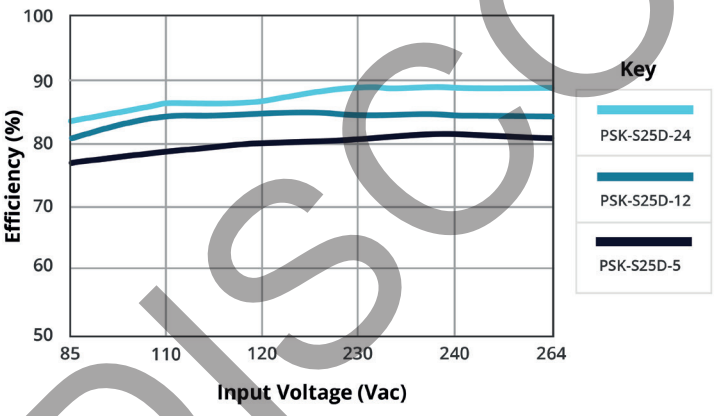

EFFICIENCY VS OUTPUT LOAD (Vin = 230 Vac)

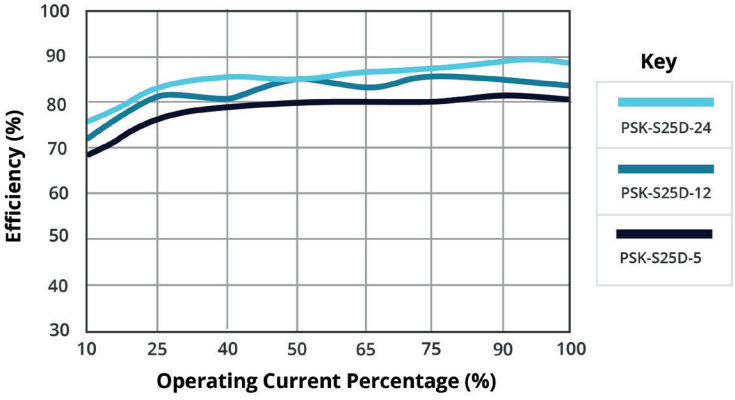

DISCONTINUED

MECHANICAL

parameter	conditions/description	min	typ	max	units
dimensions	board mount: 70.00 x 48.00 x 23.50 (2.756 x 1.890 x 0.925 inch)				mm
	chassis mount: 96.10 x 54.00 x 32.00 (3.783 x 2.126 x 1.260 inch)				mm
	DIN-Rail mount: 96.10 x 54.00 x 36.60 (3.783 x 2.126 x 1.441 inch)				mm
case material	black flame-retardant and heat-resistant plastic (UL94V-0)				
weight	board mount		120		g
	chassis mount		170		g
	DIN-Rail mount		210		g

MECHANICAL DRAWING (BOARD MOUNT)

units: mm[inch]
tolerance: ±0.50[±0.020]
pin diameter tolerance: ±0.10[±0.004]

PIN CONNECTIONS	
PIN	Function
1	GND
2	AC (N)
3	AC (L)
4	+Vo
5	no pin
6	no pin
7	no pin
8	-Vo
trim	trim

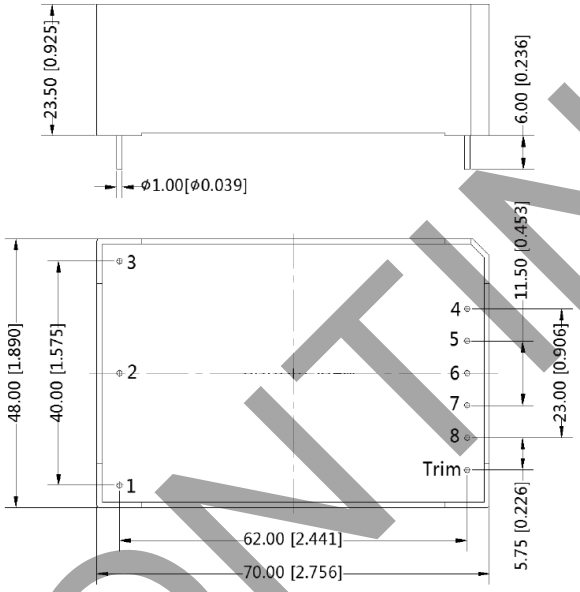

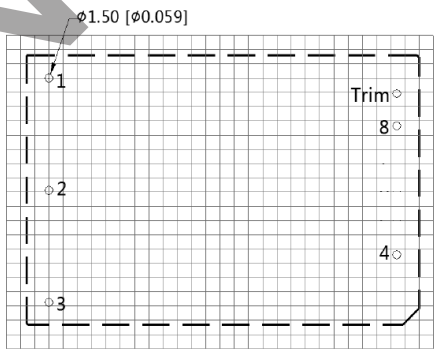

Note: Grid 2.54*2.54mm
Recommended PCB Layout
Top View

MECHANICAL DRAWING (CHASSIS MOUNT)

units: mm[inch]
tolerance: ±1.00[±0.039]

wire range: 24~12 AWG
tightening torque: max 0.4 N*m

PIN CONNECTIONS	
PIN	Function
1	GND
2	AC (N)
3	AC (L)
4	+Vo
5	NC
6	trim
7	NC
8	-Vo

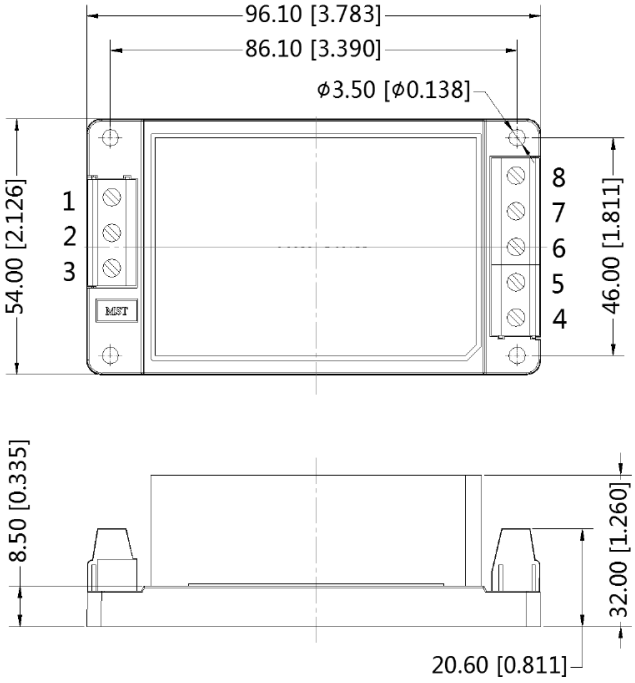

DISCONTINUED

MECHANICAL DRAWING (DIN-RAIL MOUNT)

units: mm [inch]
tolerance: ±1.00[±0.039]

installed on DIN Rail TS35
wire range: 24~12 AWG
tightening torque: max 0.4 N*m

PIN CONNECTIONS	
PIN	Function
1	GND
2	AC (N)
3	AC (L)
4	+Vo
5	NC
6	trim
7	NC
8	-Vo

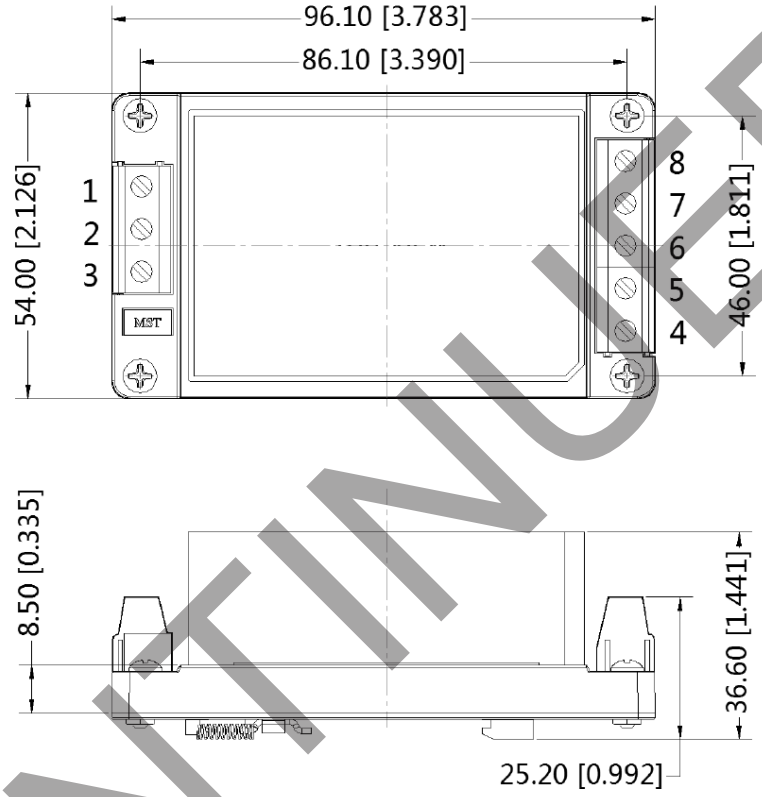

DISCONTINUED

APPLICATION CIRCUIT

Figure 1

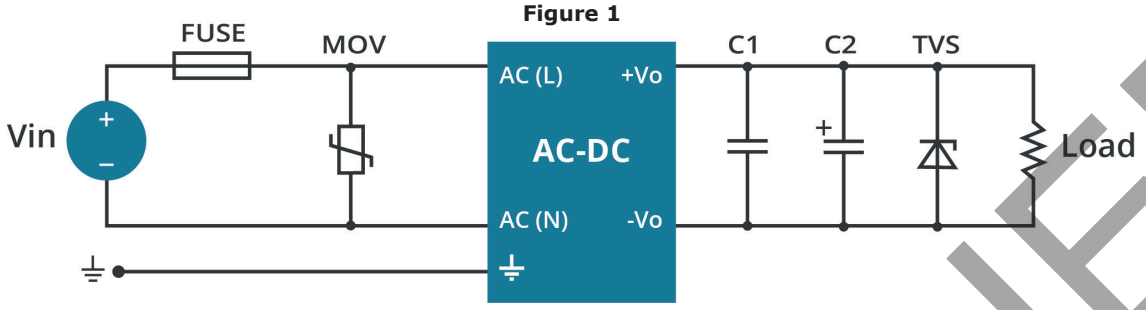

Table 1

Recommended External Circuit Components					
Vo (Vdc)	FUSE	MOV	C1	C2	TVS
3.3	3.15A/250V	S14K300	1 µF	330 µF	SMBJ7.0A
5	3.15A/250V	S14K300	1 µF	330 µF	SMBJ7.0A
9	3.15A/250V	S14K300	1 µF	330 µF	SMBJ12A
12	3.15A/250V	S14K300	1 µF	330 µF	SMBJ20A
15	3.15A/250V	S14K300	1 µF	330 µF	SMBJ20A
24	3.15A/250V	S14K300	1 µF	120 µF	SMBJ30A
48	3.15A/250V	S14K300	1 µF	68 µF	SMBJ64A

EMC RECOMMENDED CIRCUIT

Figure 2

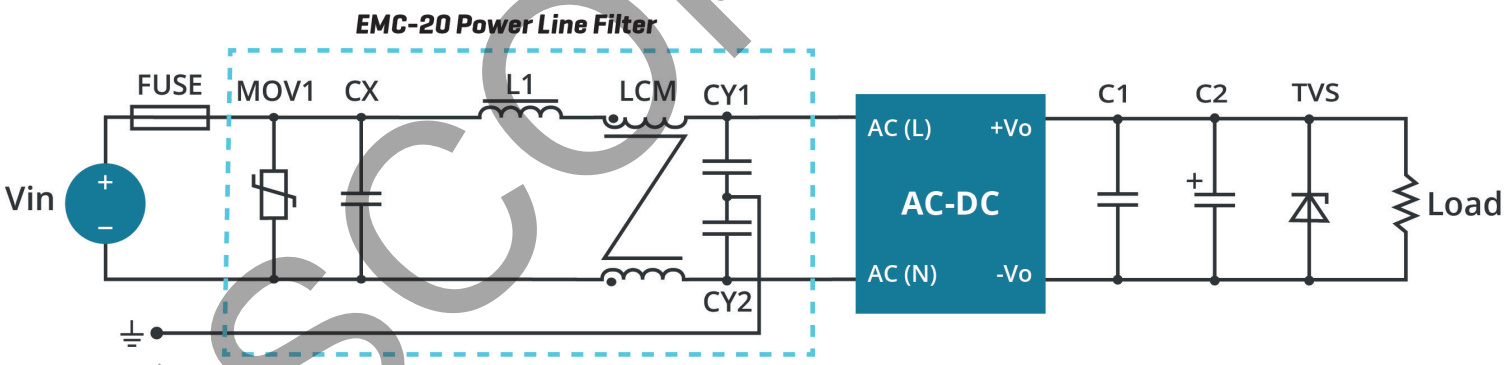

Table 2

Recommended External Circuit Components	
FUSE	3.15 A/250 V, slow fusing
MOV	S14K300
LCM	10 mH
CX	0.1 µF/275 Vac
CY1, CY2	1000 pF/400 Vac
L1	4.7 µH/ 2 A

Note: Also refer to Table 1.

Notes:
6. C1 is a ceramic capacitor used to filter high frequency noise.
7. C2 is an electrolytic capacitor and it is recommended to be high frequency and low impedance. For capacitance and current of capacitor, refer to the datasheet provided by the manufacturer. Voltage derating of capacitor should be at least 80%.
8. TVS is a recommended component to protect post-circuits (if converter fails).

DISCONTINUED

APPLICATION NOTES

Output voltage trimming
Leave open if not used.

Figure 3

Application Circuit for Trim pin
(part in broken line is the interior of models)

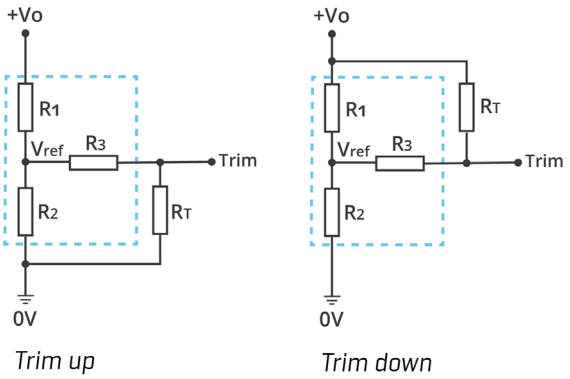

Formula for Trim Resistor

up: $R_T = \frac{aR_2}{R_2 - a} - R_3$ $\quad a = \frac{Vref}{Vot - Vref} \cdot R_1$

down: $R_T = \frac{aR_1}{R_1 - a} - R_3$ $\quad a = \frac{Vot - Vref}{Vref} \cdot R_2$

Note: Value for R1, R2, R3, and Vref refer to Table 3
R_T: Trim Resistor
a: User-defined parameter, no actual meanings
Vo': The trim up/down voltage

Table 3

Vout (Vdc)	R1 (kΩ)	R2 (kΩ)	R3 (kΩ)	Vref (V)
3.3	3.3	1.98	1	1.24
5	3.3	3.3	1	2.5
9	7.5	2.87	1	2.5
12	3.83	1	1	2.5
15	7.5	1.5	1	2.5
24	8.66	1	1	2.5
48	68	3.73	1	2.5

DISCONTINUED

REVISION HISTORY

rev.	description	date
1.0	initial release	03/07/2019
1.01	company logo updated	12/22/2020
1.02	curves and circuit drawings updated	03/25/2021
1.03	UKCA mark added	05/27/2022
1.04	discontintinued models PSK-S25D-3, PSK-S25D-3-T, PSK-S25D-5, PSK-S25D-5-T, PSK-S25D-5-DIN, PSK-S25D-9, PSK-S25D-9-T, PSK-S25D-9-DIN, PSK-S25D-15, PSK-S25D-15-T, PSK-S25D-24, PSK-S25D-24-DIN, PSK-S25D-48-T, PSK-S25D-48-DIN	09/13/2022

The revision history provided is for informational purposes only and is believed to be accurate.

DISCONTINUED

CUI INC
a bel group

Headquarters
20050 SW 112th Ave.
Tualatin, OR 97062
800.275.4899

Fax 503.612.2383
cui.com
techsupport@cui.com

CUI offers a two (2) year limited warranty. Complete warranty information is listed on our website.

CUI reserves the right to make changes to the product at any time without notice. Information provided by CUI is believed to be accurate and reliable. However, no responsibility is assumed by CUI for its use, nor for any infringements of patents or other rights of third parties which may result from its use.

CUI products are not authorized or warranted for use as critical components in equipment that requires an extremely high level of reliability. A critical component is any component of a life support device or system whose failure to perform can be reasonably expected to cause the failure of the life support device or system, or to affect its safety or effectiveness.