CUI INC
a bel group



# SERIES: PDSE1-D | DESCRIPTION: DC-DC CONVERTER

## FEATURES

- 1 W isolated output
- single unregulated output
- compact DIP package
- continuous short circuit protection
- 3000 Vdc isolation
- no load input current as low as 5 mA
- extended temperature range (-40~105°C)
- UL 62368 approval
- efficiency up to 85%

RoHS c US

| MODEL | input voltage | | output voltage | output current | | output power | ripple & noise[1] | efficiency[2] |
|---|---|---|---|---|---|---|---|---|
| | typ (Vdc) | range (Vdc) | (Vdc) | min (mA) | max (mA) | max (W) | max (mVp-p) | typ (%) |
| PDSE1-S5-S3-D | 5 | 4.5~5.5 | 3.3 | 30 | 303 | 1 | 75 | 74 |
| PDSE1-S5-S5-D | 5 | 4.5~5.5 | 5 | 20 | 200 | 1 | 75 | 82 |
| PDSE1-S5-S9-D | 5 | 4.5~5.5 | 9 | 12 | 111 | 1 | 75 | 83 |
| PDSE1-S5-S12-D | 5 | 4.5~5.5 | 12 | 9 | 84 | 1 | 75 | 83 |
| PDSE1-S5-S15-D | 5 | 4.5~5.5 | 15 | 7 | 67 | 1 | 75 | 83 |
| PDSE1-S5-S24-D | 5 | 4.5~5.5 | 24 | 4 | 42 | 1 | 100 | 85 |
| PDSE1-S12-S3-D | 12 | 10.8~13.2 | 3.3 | 30 | 303 | 1 | 75 | 75 |
| PDSE1-S12-S5-D | 12 | 10.8~13.2 | 5 | 20 | 200 | 1 | 75 | 80 |
| PDSE1-S12-S9-D[4] | 12 | 10.8~13.2 | 9 | 12 | 111 | 1 | 75 | 78 |
| PDSE1-S12-S12-D | 12 | 10.8~13.2 | 12 | 9 | 83 | 1 | 75 | 80 |
| PDSE1-S12-S15-D | 12 | 10.8~13.2 | 15 | 7 | 67 | 1 | 75 | 81 |
| PDSE1-S12-S24-D | 12 | 10.8~13.2 | 24 | 5 | 42 | 1 | 100 | 81 |
| PDSE1-S15-S5-D[4] | 15 | 13.5~16.5 | 5 | 20 | 200 | 1 | 75 | 80 |
| PDSE1-S15-S9-D[4] | 15 | 13.5~16.5 | 9 | 12 | 111 | 1 | 75 | 80 |
| PDSE1-S15-S15-D[4] | 15 | 13.5~16.5 | 15 | 7 | 67 | 1 | 75 | 81 |
| PDSE1-S24-S3-D | 24 | 21.6~26.4 | 3.3 | 30 | 303 | 1 | 75 | 75 |
| PDSE1-S24-S5-D | 24 | 21.6~26.4 | 5 | 20 | 200 | 1 | 75 | 79 |
| PDSE1-S24-S9-D[4] | 24 | 21.6~26.4 | 9 | 12 | 111 | 1 | 75 | 80 |
| PDSE1-S24-S12-D | 24 | 21.6~26.4 | 12 | 9 | 83 | 1 | 75 | 81 |
| PDSE1-S24-S15-D | 24 | 21.6~26.4 | 15 | 7 | 67 | 1 | 75 | 81 |
| PDSE1-S24-S24-D | 24 | 21.6~26.4 | 24 | 5 | 42 | 1 | 100 | 81 |

Notes:
1. Measured at nominal input, 20 MHz bandwidth oscilloscope, with 10 µF tantalum and 1 µF ceramic capacitors on the output.
2. Measured at nominal input voltage, full load.
3. All specifications are measured at Ta=25°C, humidity < 75%, nominal input voltage, and rated output load unless otherwise specified.
4. Model is not UL certified.

## PART NUMBER KEY

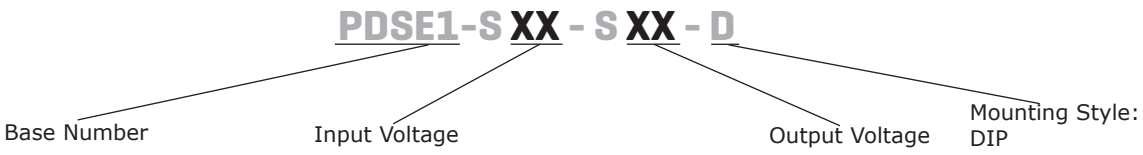


## INPUT

| parameter | conditions/description | | min | typ | max | units |
|---|---|---|---|---|---|---|
| operating input voltage | 5 Vdc input models | | 4.5 | 5 | 5.5 | Vdc |
| | 12 Vdc input models | | 10.8 | 12 | 13.2 | Vdc |
| | 15 Vdc input models | | 13.5 | 13 | 16.5 | Vdc |
| | 24 Vdc input models | | 21.6 | 24 | 26.4 | Vdc |
| surge voltage | for maximum of 1 second | | | | | |
| | 5 Vdc input models | | -0.7 | | 9 | Vdc |
| | 12 Vdc input models | | -0.7 | | 18 | Vdc |
| | 15 Vdc input models | | -0.7 | | 21 | Vdc |
| | 24 Vdc input models | | -0.7 | | 30 | Vdc |
| current | for maximum of 1 second | | | | | |
| | 5 Vdc input models | 3.3 Vdc output model | | | 286 | mA |
| | | all other output models | | | 254 | mA |
| | 12 Vdc input models | 3.3 Vdc output model | | | 118 | mA |
| | | 5, 12 Vdc output model | | | 110 | mA |
| | | all other output models | | | 109 | mA |
| | 15 Vdc input models | 5, 9 Vdc output model | | | 88 | mA |
| | | 15 Vdc output model | | | 87 | mA |
| | 24 Vdc input models | 3.3 Vdc output model | | | 61 | mA |
| | | 5 Vdc output model | | | 58 | mA |
| | | 9 Vdc output model | | | 57 | mA |
| | | all other output models | | | 56 | mA |
| filter | filter capacitor | | | | | |

## OUTPUT

| parameter | conditions/description | min | typ | max | units |
|---|---|---|---|---|---|
| maximum capacitive load[4] | 3.3, 5 Vdc output models | | | 2,400 | µF |
| | 9 Vdc output models | | | 1,000 | µF |
| | 12, 15 Vdc output models | | | 560 | µF |
| | all other models | | | 220 | µF |
| voltage accuracy | see tolerance envelope curves | | | | |
| line regulation | for Vin change of 1% | | | | |
| | 3.3 Vdc output models | | | ±1.5 | % |
| | all other models | | | ±1.2 | % |
| load regulation | from 10% to full load | | | | |
| | 3.3 Vdc output models | | | ±20 | % |
| | 5 Vdc output models | | | ±15 | % |
| | all other models | | | ±10 | % |
| switching frequency | 100% load, nominal input voltage | | 270 | | kHz |
| temperature coefficient | at full load | | ±0.02 | | %/°C |

Note: 4. Tested at input voltage range and full load.

## PROTECTIONS

| parameter | conditions/description | min | typ | max | units |
|---|---|---|---|---|---|
| short circuit protection | continuous, self recovery | | | | |

## SAFETY AND COMPLIANCE

| parameter | conditions/description | min | typ | max | units |
|---|---|---|---|---|---|
| isolation voltage | input to output for 1 minute at 1 mA | 3,000 | | | Vdc |
| isolation resistance | input to output at 500 Vdc | 1,000 | | | MΩ |
| isolation capacitance | input to output, 100 kHz / 0.1 V | | 20 | | pF |
| safety approvals | certified to 62368-1: UL<br>designed to meet 62368: EN/BS EN | | | | |
| conducted emissions | CISPR32/EN55032, class B (external circuit required, see Figure 2) | | | | |
| radiated emissions | CISPR32/EN55032, class B (external circuit required, see Figure 2) | | | | |
| ESD | IEC/EN61000-4-2, air ± 8 kV; contact ± 4 kV, class B | | | | |
| MTBF | as per MIL-HDBK-217F, 25°C | 3,500,000 | | | hours |
| RoHS | yes | | | | |

## ENVIRONMENTAL

| parameter | conditions/description | min | typ | max | units |
|---|---|---|---|---|---|
| operating temperature | see derating curves | -40 | | 105 | °C |
| storage temperature | | -55 | | 125 | °C |
| storage humidity | non-condensing | | | 95 | % |
| case temperature rise | 3.3 Vdc output model at 25°C<br>all other models at 25°C | | 25<br>15 | | °C<br>°C |

## DERATING CURVES

***TEMPERATURE DERATING CURVE***

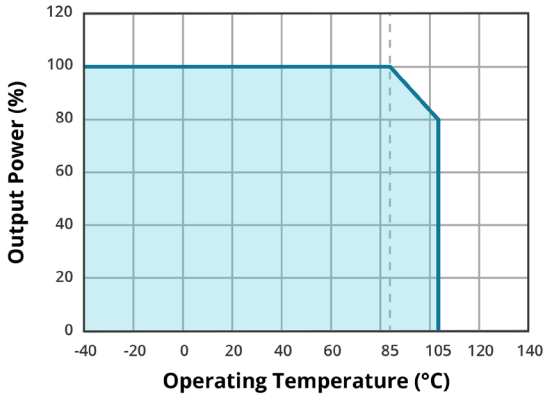


***OUTPUT REGULATION CURVE***
***3.3 Vdc output models***
***(nominal input)***

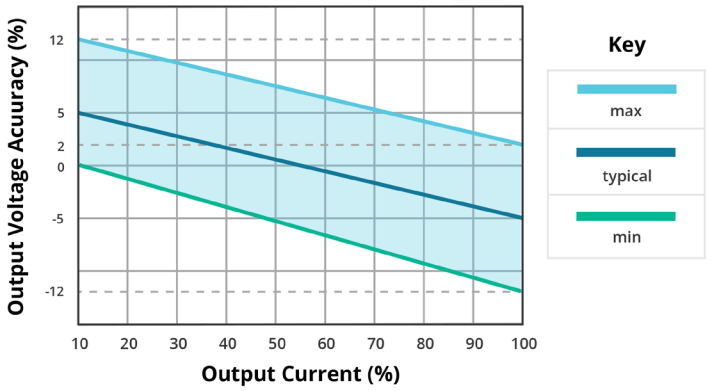


***OUTPUT REGULATION CURVE***
***5 Vdc input model / 5, 9, 12, 15, 24 Vdc output models***
***(nominal input)***

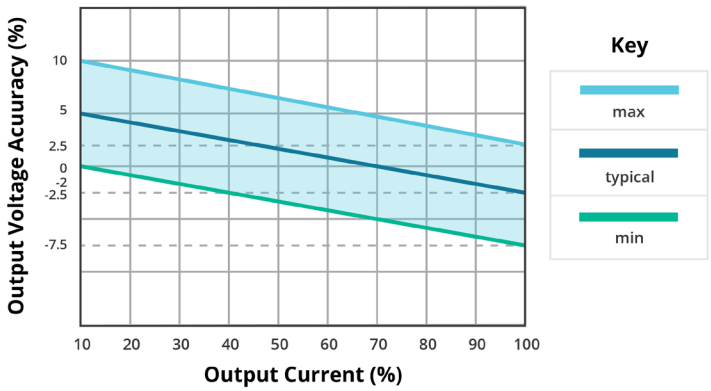


***OUTPUT REGULATION CURVE***
***all other input models / 5, 9, 12, 15, 24 Vdc output models***
***(nominal input)***

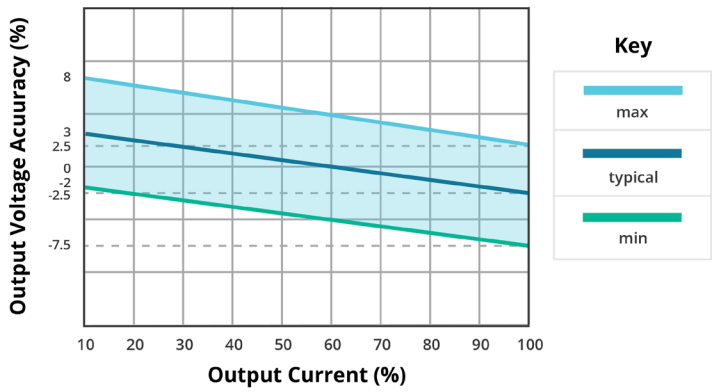

## SOLDERABILITY

| parameter | conditions/description | min | typ | max | units |
|---|---|---|---|---|---|
| hand soldering | 1.5 mm from case for 10 seconds | | | 300 | °C |
| wave soldering | see wave soldering profile | | | 260 | °C |

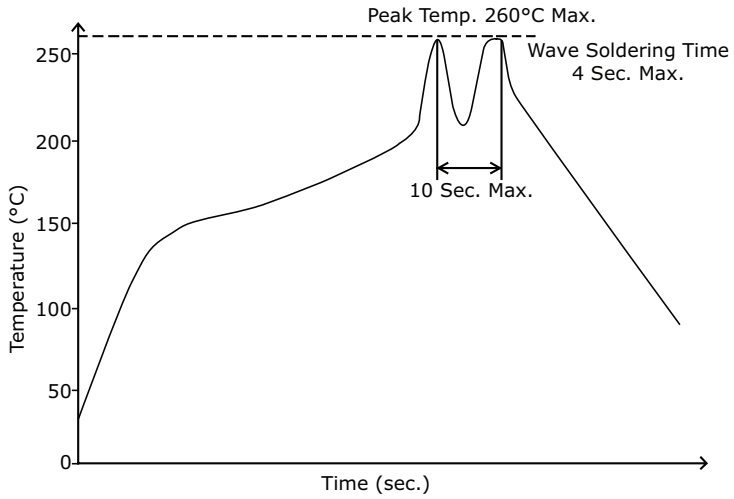


## MECHANICAL

| parameter | conditions/description | min | typ | max | units |
|---|---|---|---|---|---|
| dimensions | 12.70 x 10.16 x 8.20[0.500 x 0.400 x 0.323 inch] | | | | mm |
| case material | black flame-retardant and heat-resistant plastic (UL94V-0) | | | | |
| weight | | | 1.8 | | g |

## MECHANICAL DRAWING

units: mm [inch]
tolerance: ±0.25[±0.010]
pin section tolerance: ±0.10[±0.004]

| PIN CONNECTIONS | |
|---|---|
| PIN | Function |
| 1 | GND |
| 4 | Vin |
| 5 | +Vout |
| 7 | 0V |

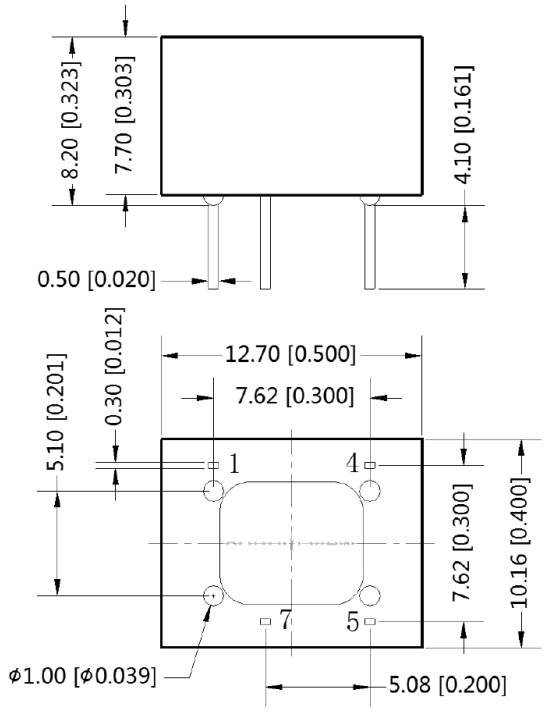


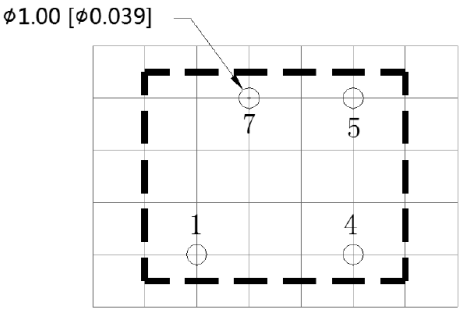


Note:Grid 2.54*2.54mm
Recommended PCB Layout
Top View

## APPLICATION CIRCUIT

If you want to further reduce the input and output ripple, a filter capacitor may be connected to the input and output terminals (Figure 1) provided that the capacitance is less than the maximum capacitive load of the model, otherwise start-up problems may be caused if the capacitance is too large.

**Figure 1**

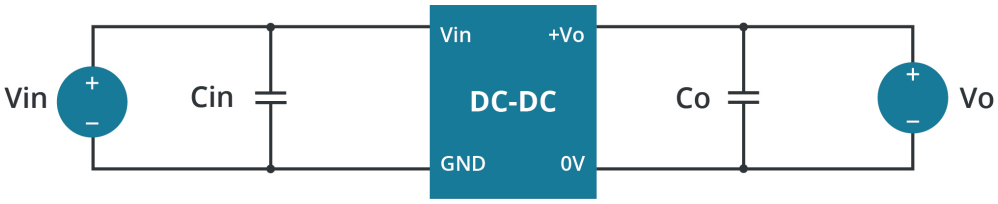


**Table 1**

| Vin (Vdc) | Cin (μF/V) | Vo (Vdc) | Cout (μF/V) |
|---|---|---|---|
| 5 | 4.7 | 3.3, 5 | 10 |
| | | 9, 12 | 2.2 |
| | | 15, 24 | 1 |
| 12 | 2.2/25 | 3.3, 5 | 10/16 |
| 15 | 2.2/25 | 9 | 4.7/25 |
| 24 | 1/50 | 12 | 2.2/50 |
| -- | -- | 15, 24 | 1/50 |

## EMC RECOMMENDED CIRCUIT

**Figure 2**

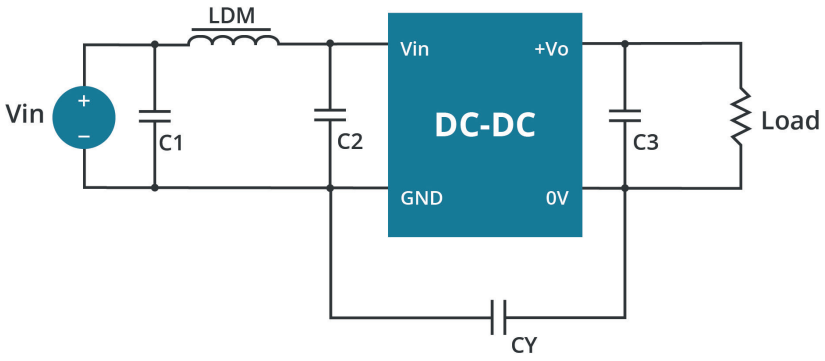


**Table 2**

| Recommended External Circuit Components | | | |
|---|---|---|---|
| Vin (Vdc) | Vo (Vdc) | 3.3, 5, 9 | 12, 15, 24 |
| 5 | CY | -- | 1 nF / 4kVdc |
| | C3 | refer to the Cout in Table 1 | |
| | C1, C2 | 4.7 μF / 25 V | 4.7 μF / 25 V |
| | LDM | 6.8 μH | 6.8 μH |
| 12, 15, 24 | C1, C2 | 4.7 μF / 50 V | 4.7 μF / 50 V |
| | C3 | Refer to Cout in Table 1 | |
| | LDM | 6.8 μH | 6.8 μH |
| | CY | 270 pF / 3 kVdc | 270 pF / 3 kVdc |

## REVISION HISTORY

| rev. | description | date |
|---|---|---|
| 1.0 | initial release | 07/10/2019 |
| 1.01 | company logo updated | 03/30/2021 |
| 1.03 | updated datasheet | 06/21/2021 |
| 1.04 | CE certification removed | 11/07/2022 |

The revision history provided is for informational purposes only and is believed to be accurate.

CUI INC
a bel group

**Headquarters**
20050 SW 112th Ave.
Tualatin, OR 97062
**800.275.4899**

Fax 503.612.2383
**cui**.com
techsupport@cui.com

CUI offers a two (2) year limited warranty. Complete warranty information is listed on our website.

CUI reserves the right to make changes to the product at any time without notice. Information provided by CUI is believed to be accurate and reliable. However, no responsibility is assumed by CUI for its use, nor for any infringements of patents or other rights of third parties which may result from its use.

CUI products are not authorized or warranted for use as critical components in equipment that requires an extremely high level of reliability. A critical component is any component of a life support device or system whose failure to perform can be reasonably expected to cause the failure of the life support device or system, or to affect its safety or effectiveness.