CUI INC
a bel group

SERIES: PDRC-75 | **DESCRIPTION:** AC-DC DIN RAIL POWER SUPPLY

FEATURES

- low profile for building automation
- universal input (90~264 Vac)
- integrated fuse and surge protection
- 3,000 Vac input/output isolation voltage
- DC On/Low LED indicators
- over-voltage/current protection
- UL/cUL, TUV, CE certified

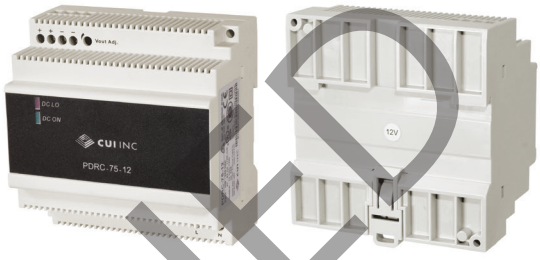

MODEL

MODEL	output voltage (Vdc)	output current max (A)	output power max (W)	ripple and noise[1] max (mVp-p)	efficiency[2] typ (%)
PDRC-75-5	5	12.0	60	50	80
PDRC-75-12	12	6.0	72	50	86
PDRC-75-15	15	5.0	75	50	86
PDRC-75-24	24	4.2	100	50	89
PDRC-75-24-2[3]	24	3.8	91	50	89

Notes:
1. At full load, nominal input, 20 MHz bandwidth oscilloscope.
2. At nominal input.
3. Model PDRC-75-24-2 is UL 1310 certified.
4. All specifications are measured at Ta=25°C, nominal input voltage, and rated output load unless otherwise specified.

PART NUMBER KEY

PDRC-75 - XX

Base Number — Output Voltage

DISCONTINUED

INPUT

parameter	conditions/description	min	typ	max	units
voltage		90 120		264 375	Vac Vdc
frequency		47		63	Hz
current	at 90 Vac, full load 5 Vdc output model 12, 15 output model 24 Vdc output model			 1.5 1.7 2.2	 A A A
inrush current	at 115 Vac, full load at 230 Vac, full load			30 60	A A
leakage current	input to output			0.25	mA

OUTPUT

parameter	conditions/description	min	typ	max	units
capacitive load	at Vi nom, full load			3,500	µF
initial set point accuracy				±1	%
line regulation	at full load, V in min to V in max			±1	%
load regulation	at Vi nom, 0~100% load			±1	%
adjustability	via built in trim pot, 0.8 A load 5 Vdc output model 12 Vdc output model 15 Vdc output model 24 Vdc output model 24 Vdc output model (PDRC-75-24-2)	 5 12 13.5 24 20		 5.5 14 16.5 28 24.2	 Vdc Vdc Vdc Vdc Vdc
rated continuous loading at max trim voltage	5 Vdc output model (5.5 Vdc) 12 Vdc output model (14.0 Vdc) 15 Vdc output model (16.5 Vdc) 24 Vdc output model (28.0 Vdc) 24 Vdc output model (PDRC-75-24-2) (24.2 Vdc)			10.5 5.1 4.5 3.6 3.7	A A A A A
start-up time	at Vi nom, full load at Vi nom, full load with max capacitive load			1.0 1.5	s s
rise time	at Vi nom, full load at Vi nom, full load with max capacitive load			150 500	ms ms
hold-up time	5, 12 Vdc output models at 115 Vac, full load at 230 Vac, full load	 16 60			 ms ms
	15, 24 Vdc output models at 115 Vac, full load at 230 Vac, full load	 12 60			 ms ms
fall time	at Vi nom, full load			150	ms
transient recovery time	at Vi nom, 100~50% load			2	ms
switching frequency	at Vi nom, full load	35		45	kHz
temperature coefficient				±0.03	%/°C
power back immunity	at Vi nom, full load, for 1 second 5 Vdc output model 12 Vdc output model 15 Vdc output model 24 Vdc output model	 7.5 18 22 35			 Vdc Vdc Vdc Vdc
DC ON indicator threshold at start-up (GREEN)	5 Vdc output model 12 Vdc output model 15 Vdc output model 24 Vdc output model	3.5 9.0 11.0 19.2		4.5 10.8 13.5 21.6	Vdc Vdc Vdc Vdc
DC LOW indicator threshold after start-up (RED)	5 Vdc output model 12 Vdc output model 15 Vdc output model 24 Vdc output model	3.5 9.0 11.0 19.2		4.5 10.8 13.5 21.6	Vdc Vdc Vdc Vdc

DISCONTINUED

PROTECTIONS

parameter	conditions/description	min	typ	max	units
over voltage protection	at Vi nom, full load, auto recovery 5 Vdc output model 12 Vdc output model 15 Vdc output model 24 Vdc output model 24 Vdc output model (PDRC-75-24-2)	 5.75 15 18 30 24.5		 6.5 16.5 20 33 25.5	 Vdc Vdc Vdc Vdc Vdc
over current protection	fold forward (see curve) 24 Vdc output model (PDRC-75-24-2) all other models	 102 110		 108 150	 % %
short circuit protection	fold forward				

SAFETY & COMPLIANCE

parameter	conditions/description	min	typ	max	units
isolation voltage	input to output for 1 minute	3,000 4,242			Vac Vdc
isolation resistance	input to output at 500 Vdc	100			MΩ
safety approvals[5]	UL 508, UL 1310, UL/EN 62368-1 ISA 12.12.01 (Class I, Div 2, Groups A~D)				
safety class	class I				
EMI/EMC	EN 55032 Class B, EN 55024, ENV 50204, EN 61204-3, EN 61000-3-2, EN 61000-3-3, EN 61000-6-2, EN 61000-6-3, EN 61000-4-2, EN 61000-4-3, EN 61000-4-4, EN 61000-4-5, EN 61000-4-6, EN 61000-4-8, EN 61000-4-11				
pollution degree	2				
degree of protection	IP20				
MTBF	as per Bellcore Issue 6 at 40 °C, GB 5 Vdc output model 12 Vdc output model 15 Vdc output model 24 Vdc output model 24 Vdc output model (PDRC-75-24-2)		 610,000 578,000 581,000 554,000 583,000		 hours hours hours hours hours
RoHS	yes				

Notes: 5. Model PDRC-75-24-2 is only model that is UL 1310 certified.
6. The power supply is considered a component which will be installed into final equipment. The final equipment still must be tested to meet the necessary EMC directives.

ENVIRONMENTAL

parameter	conditions/description	min	typ	max	units
operating temperature	see derating curves	-40		71	°C
storage temperature		-40		85	°C
humidity	non-condensing	20		95	%
altitude	IEC 60068-2-13			4,850	m
vibration	meets IEC 60068-2-6 (Mounting on rail: 10~500 Hz, 2 G, along X,Y,Z axis, for 60 minutes on each axis)				
shock	meets IEC 60068-2-27 (15 G, 11 ms, 3 axis, 6 faces, 3 times for each face)				

DISCONTINUED

MECHANICAL

parameter	conditions/description	min	typ	max	units
dimensions	91.00 x 90.00 x 57.00 (3.58 x 3.54 x 2.24 inches)				mm
material	plastic				
weight			380		g
cooling	natural convection				
input/output connector	accepts 24~12 AWG wire				

MECHANICAL DRAWING

units: mm [inch]
tolerance:
X≤30.00: ±0.30 [±0.01]
30.00<X≤120.00: ±0.50 [±0.02]
unless otherwise noted

TERMINAL CONNECTIONS	
TERMINAL	Function
1	V-
2	V-
3	V+
4	V+
5	L
6	N

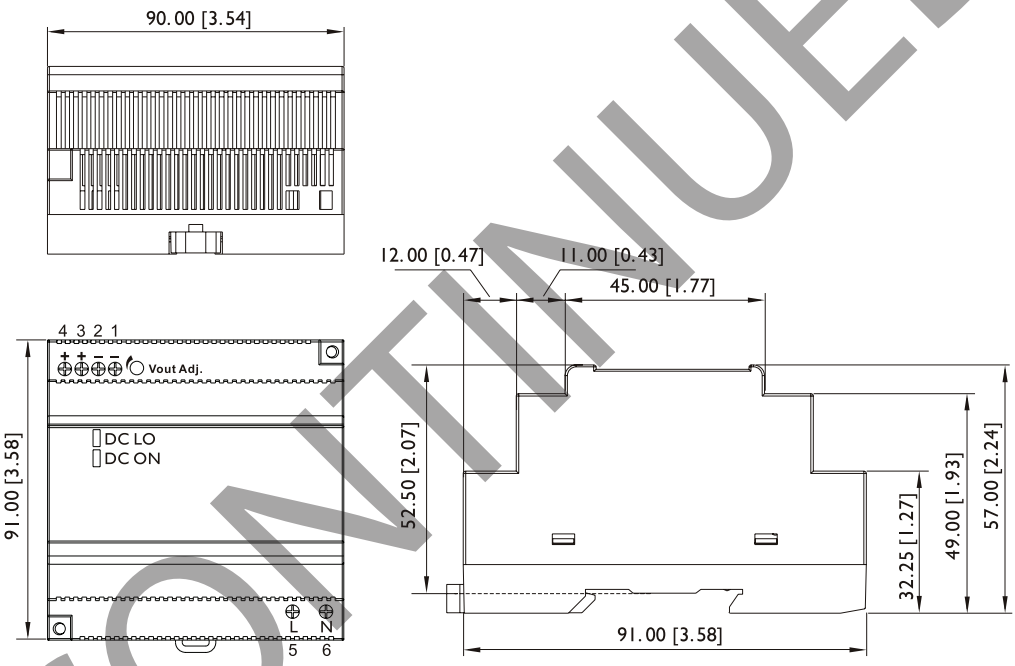

INSTALLATION	
DIN RAIL	TS35/7.5 or TS35/15
Cable	flexible/solid, copper conductors only, 60/75°C
Wire Range	24~12 AWG (0.2~2.5 mm²)
Strip Length	7 mm
Screw Torque	6 lb·in
Position	Vertical
Cooling	Natural convection, 25 mm clearance on all sides

DISCONTINUED

DERATING CURVES

TEMPERATURE DERATING CURVE

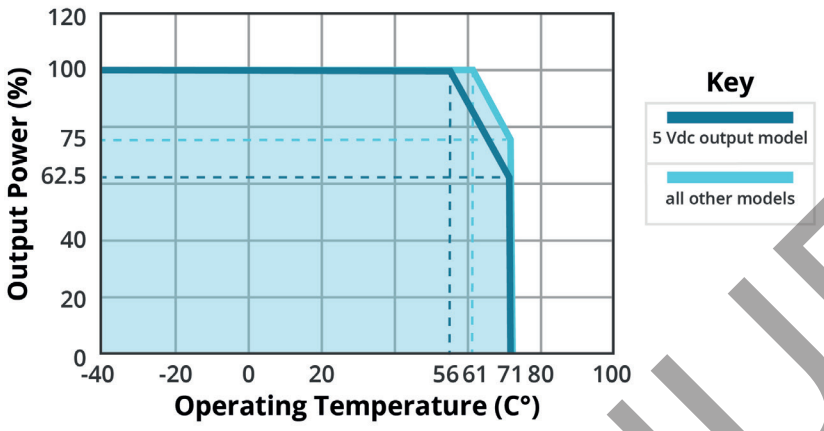

EFFICIENCY CURVES

EFFICIENCY VS OUTPUT LOAD (PDRC-75-24)

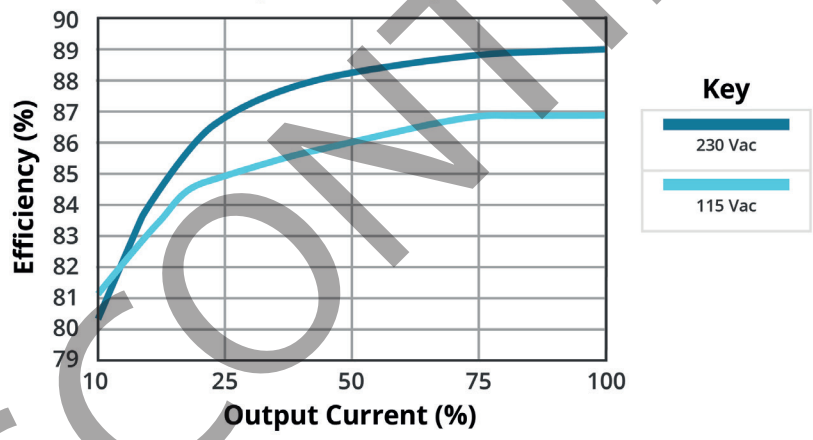

CURRENT LIMITED CURVE

TYPICAL OVER CURRENT PROTECTION CURVE (PDRC-75-24)

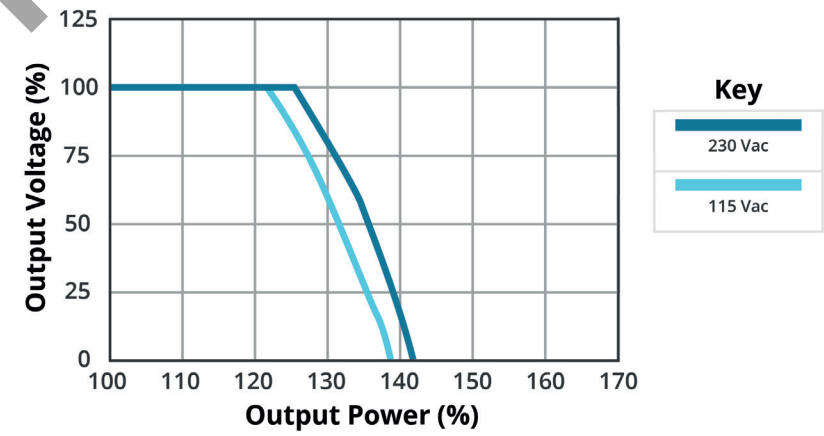

DISCONTINUED

REVISION HISTORY

rev.	description	date
1.0	initial release	06/17/2019
1.01	updated safety certifications	08/04/2020
1.02	safety marks updated	04/27/2021
1.03	efficiency and derating curves updated	02/21/2022

The revision history provided is for informational purposes only and is believed to be accurate.

DISCONTINUED

CUI INC
a bel group

Headquarters
20050 SW 112th Ave.
Tualatin, OR 97062
800.275.4899

Fax 503.612.2383
cui.com
techsupport@cui.com

CUI offers a two (2) year limited warranty. Complete warranty information is listed on our website.

CUI reserves the right to make changes to the product at any time without notice. Information provided by CUI is believed to be accurate and reliable. However, no responsibility is assumed by CUI for its use, nor for any infringements of patents or other rights of third parties which may result from its use.

CUI products are not authorized or warranted for use as critical components in equipment that requires an extremely high level of reliability. A critical component is any component of a life support device or system whose failure to perform can be reasonably expected to cause the failure of the life support device or system, or to affect its safety or effectiveness.