CUDEVICES

MODEL: CSQG703BP | **DESCRIPTION:** MAGNETIC BUZZER TRANSDUCER

FEATURES

- through hole
- 85 dB
- externally driven

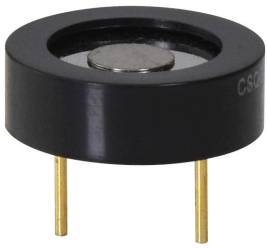

RoHS

SPECIFICATIONS

parameter	conditions/description	min	typ	max	units
rated voltage	Vo-p 0V		3.0		Vo-p
operating voltage		2.0		4.0	Vo-p
current consumption	at rated voltage, 2,000 Hz square wave, ½ duty			90	mA
rated frequency			2,000		Hz
sound pressure level	at 5 cm (A-weight), rated voltage, 2,000 Hz square wave, ½ duty	85	90		dBA
coil resistance		13.0	15.0	17.0	Ω
dimensions	Ø12.0 x 3.8				mm
weight			1.0		g
material	PPO				
terminal	pin type (Au plating)				
operating temperature		-30		70	°C
storage temperature		-40		85	°C
RoHS	yes				

Notes: 1. All specifications measured at 5~35°C, humidity at 45~85%, under 86~106kPa pressure, unless otherwise noted.

SOLDERABILITY

parameter	conditions/description	min	typ	max	units
hand soldering[2]	for maximum 2 seconds	330		380	°C

Notes: 2. Not recommended for wave soldering

MECHANICAL DRAWING

units: mm
tolerance: ±0.5 mm

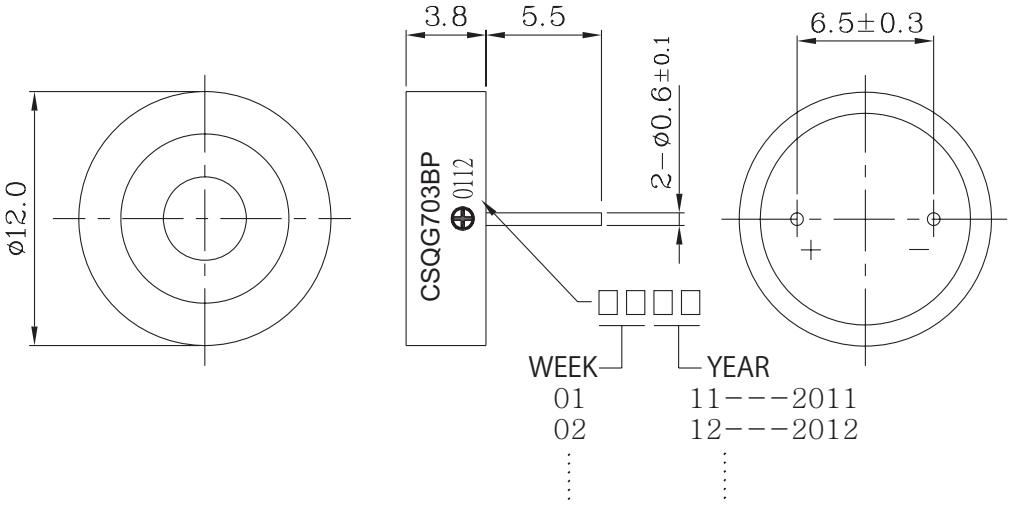

FREQUENCY RESPONSE CURVE

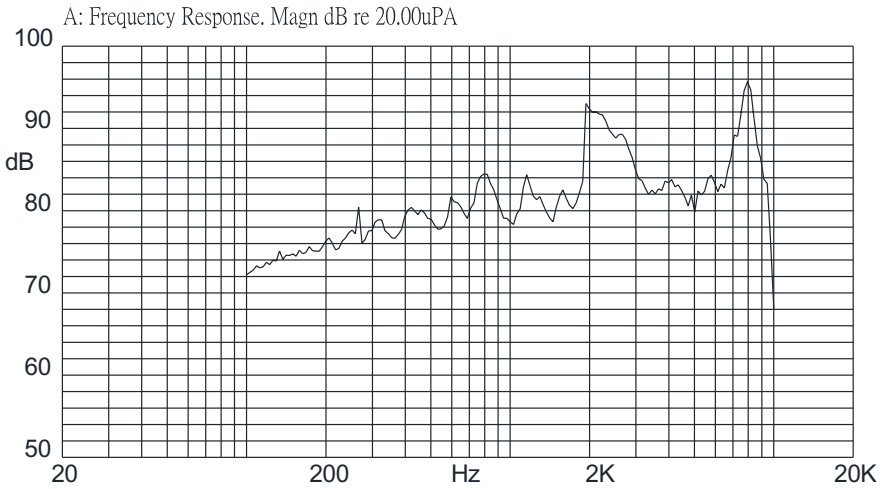

MEASUREMENT METHOD

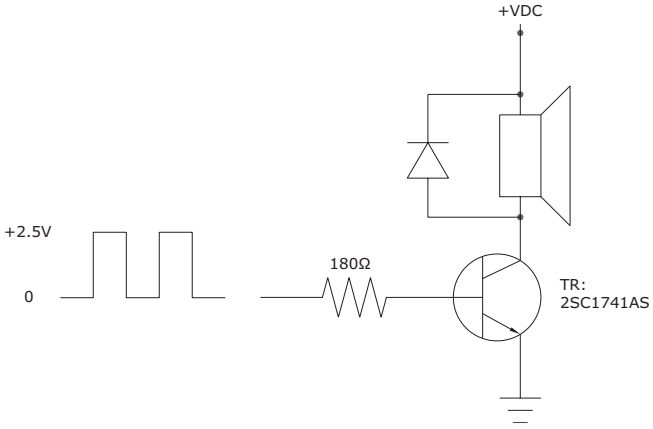

PACKAGING

Internal Tray Size: 184 x 184 x 23 mm
Carton Size: 440 x 400 x 310 mm
QTY: 6,000 pcs (500 x 12)

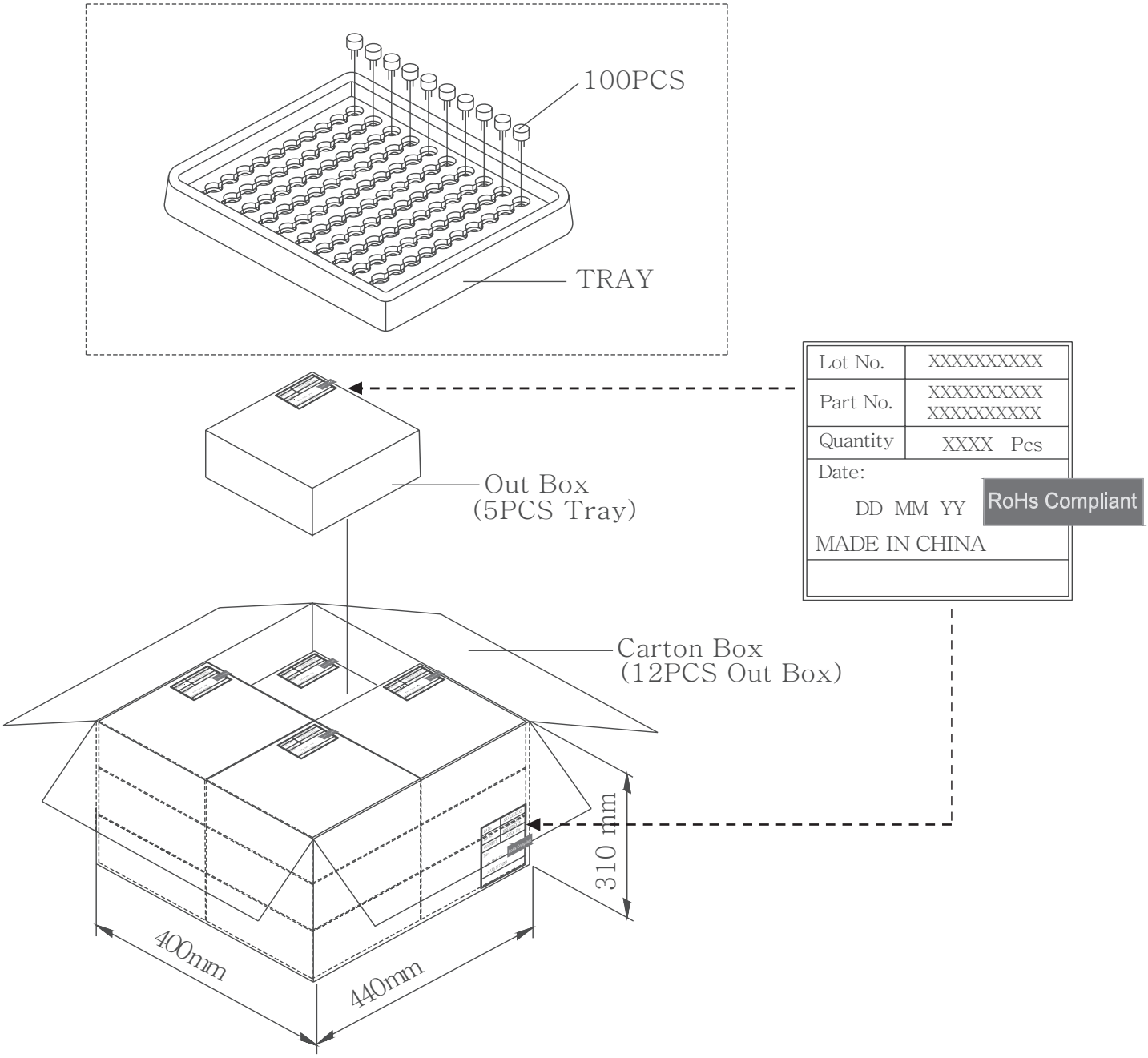

REVISION HISTORY

rev.	description	date
1.0	initial release	09/20/2006
1.01	updated datasheet	07/31/2019
1.02	brand update	03/16/2020
1.03	logo, datasheet style update	08/05/2022

The revision history provided is for informational purposes only and is believed to be accurate.

CUI Devices offers a one (1) year limited warranty. Complete warranty information is listed on our website.

CUI Devices reserves the right to make changes to the product at any time without notice. Information provided by CUI Devices is believed to be accurate and reliable. However, no responsibility is assumed by CUI Devices for its use, nor for any infringements of patents or other rights of third parties which may result from its use.

CUI Devices products are not authorized or warranted for use as critical components in equipment that requires an extremely high level of reliability. A critical component is any component of a life support device or system whose failure to perform can be reasonably expected to cause the failure of the life support device or system, or to affect its safety or effectiveness.