MODEL: CPT-1495C-300 | DESCRIPTION: PIEZO BUZZER TRANSDUCER

FEATURES

- externally driven
- wire leads
- IP67 rated

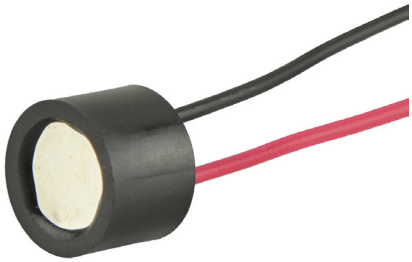

SPECIFICATIONS

parameter	conditions/description	min	typ	max	units
operating voltage				30	Vp-p
current consumption	at 10 Vp-p, 4,250 Hz square wave			12	mA
rated frequency			4,250		Hz
sound pressure level	at 10 cm, 10 Vp-p, 4,250 Hz square wave	84			dB
electrostatic capacity	at 1,000 Hz/1 V	14,000	20,000	26,000	pF
dimensions	Ø14.0 x 10.0				mm
weight				2.60	g
material	PBT+15% Glass				
terminal	wire type				
operating temperature		-30		85	°C
storage temperature		-40		95	°C
RoHS	yes				
IP level	IP67 (IEC standard 529 edition 2.0 (1989))				

Notes: 1. All specifications measured at 5~35°C, humidity at 45~85%, under 86~106 kPa pressure, unless otherwise noted.

SOLDERABILITY

parameter	conditions/description	min	typ	max	units
hand soldering	for maximum 5 seconds	330		380	°C

MECHANICAL DRAWING

units: mm
tolerance: ±0.5 mm

wire: UL1007 LF 22 AWG

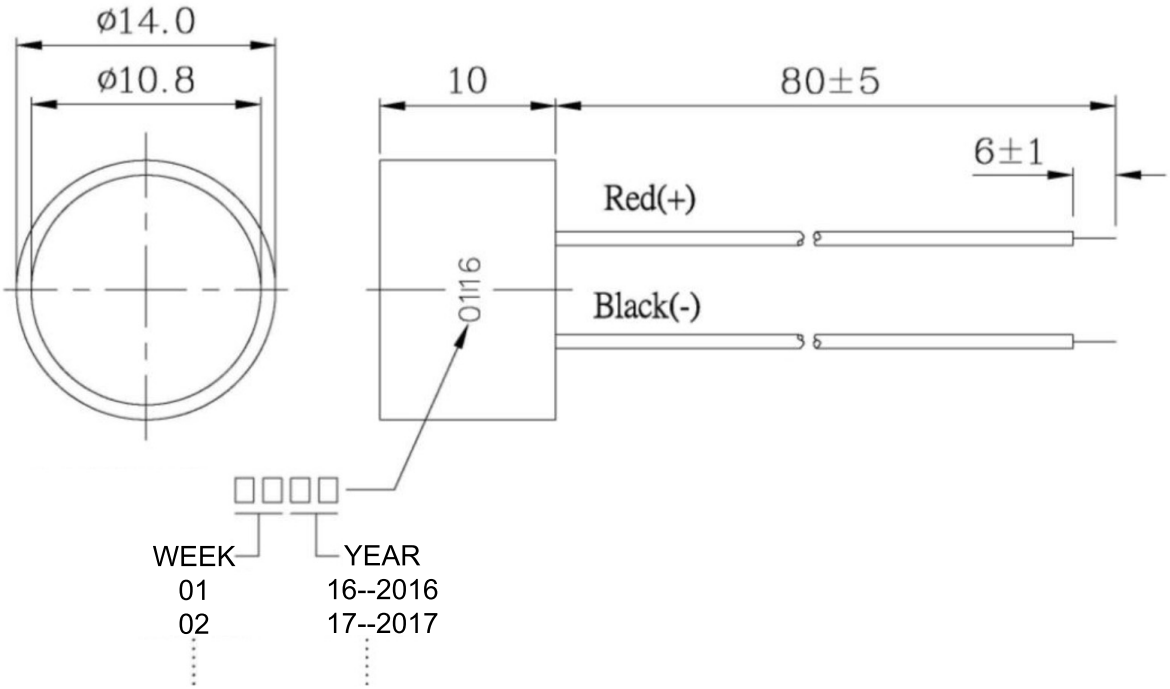

FREQUENCY RESPONSE CURVE

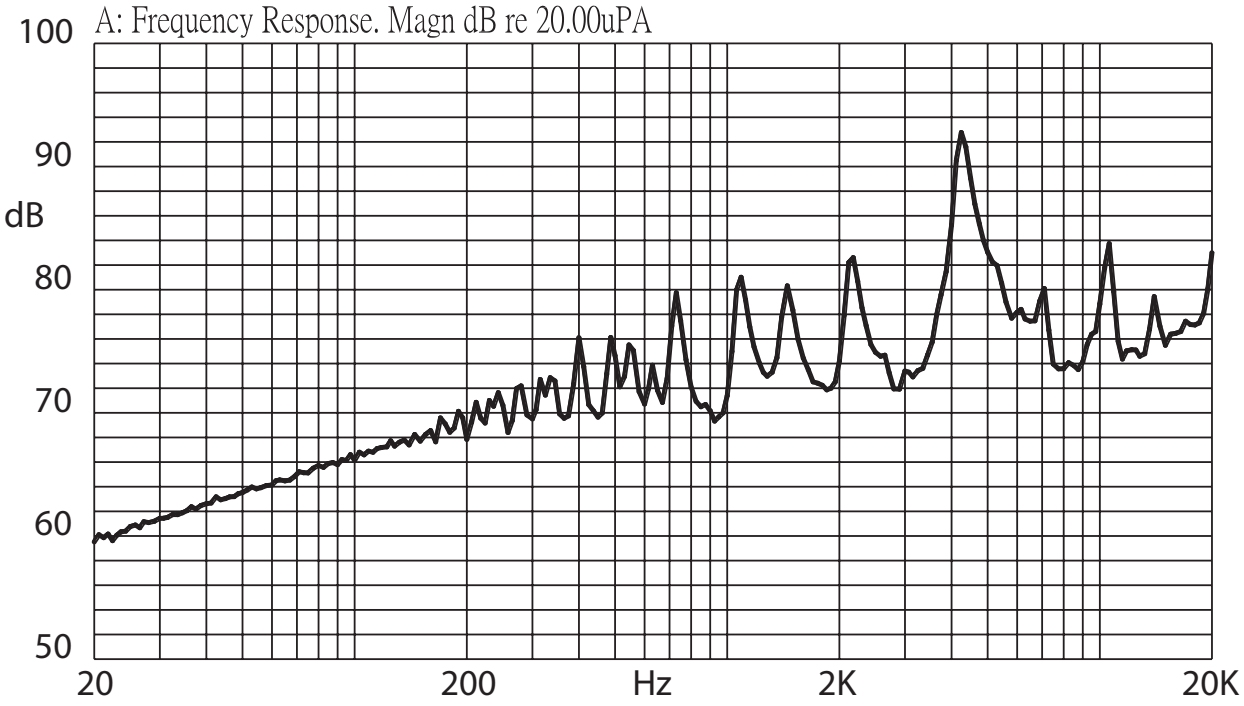

PACKAGING

units: mm

Outer Box Size: 310 x 248 x 49 mm
Carton Size: 550 x 330 x 290 mm
Outer Box QTY: 400 pcs per outer box
Carton QTY: 4,000 pcs per carton

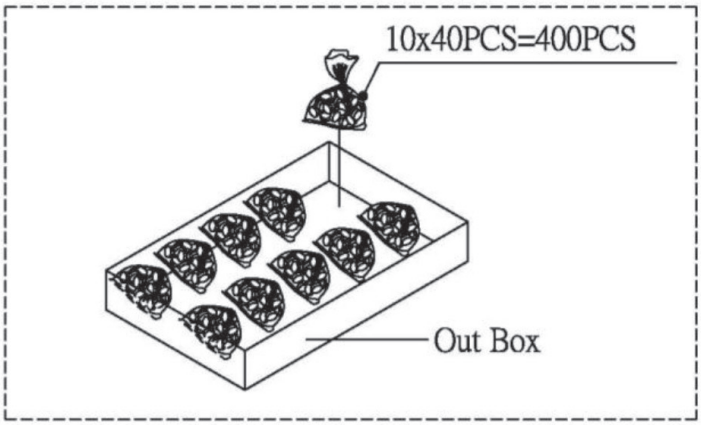

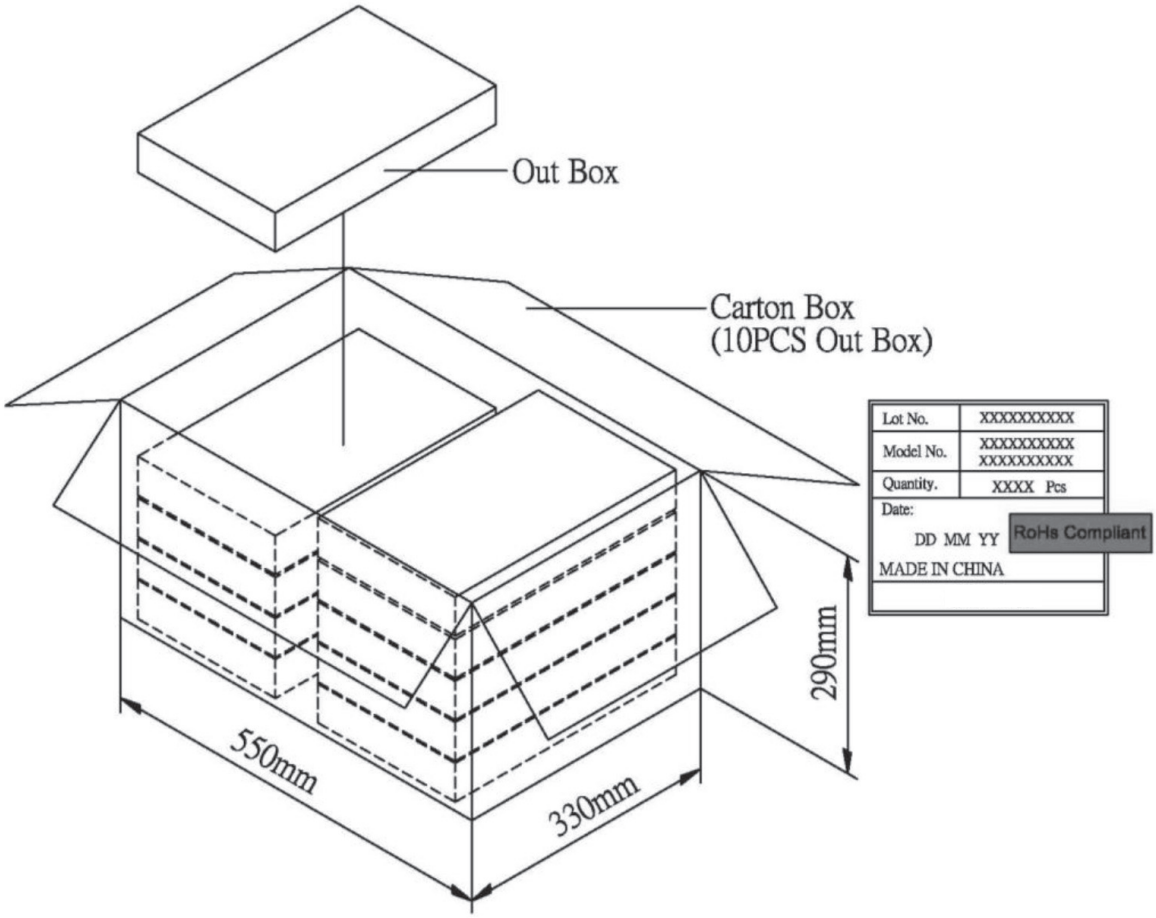

REVISION HISTORY

rev.	description	date
1.0	initial release	03/30/2016
1.01	brand update	11/22/2019
1.02	logo, datasheet style update	08/05/2022

The revision history provided is for informational purposes only and is believed to be accurate.

CUI Devices offers a one (1) year limited warranty. Complete warranty information is listed on our website.

CUI Devices reserves the right to make changes to the product at any time without notice. Information provided by CUI Devices is believed to be accurate and reliable. However, no responsibility is assumed by CUI Devices for its use, nor for any infringements of patents or other rights of third parties which may result from its use.

CUI Devices products are not authorized or warranted for use as critical components in equipment that requires an extremely high level of reliability. A critical component is any component of a life support device or system whose failure to perform can be reasonably expected to cause the failure of the life support device or system, or to affect its safety or effectiveness.