CUDEVICES

MODEL: CEB-44D06 | **DESCRIPTION:** PIEZOELECTRIC DIAPHRAGM

FEATURES

- piezo element with wire leads
- 20 Vp-p max operating voltage
- 600 Hz rated frequency

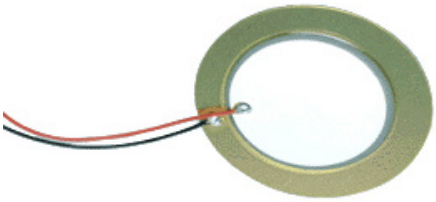

RoHS

SPECIFICATIONS

parameter	conditions/description	min	typ	max	units
operating voltage				20	Vp-p
resonant frequency	only for piezo element without wire	300	600	900	Hz
resonant impedance	only for piezo element without wire			1000	Ω
electrostatic capacity	at 120 Hz/1 V	49,000	70,000	91,000	pF
dc resistance	for 1 second	20			MΩ
dimensions	Ø44 x 0.23				mm
weight				5.1	g
material	brass				
terminal	wire leads				
operating temperature		-20		70	°C
storage temperature		-30		80	°C
RoHS	yes				

Notes: 1. All specifications measured at 5~35°C, humidity at 45~85%, under 86~106kPa pressure, unless otherwise noted.

MECHANICAL DRAWING

units: mm
tolerance: ±0.5 mm

wire: UL1571 32 AWG

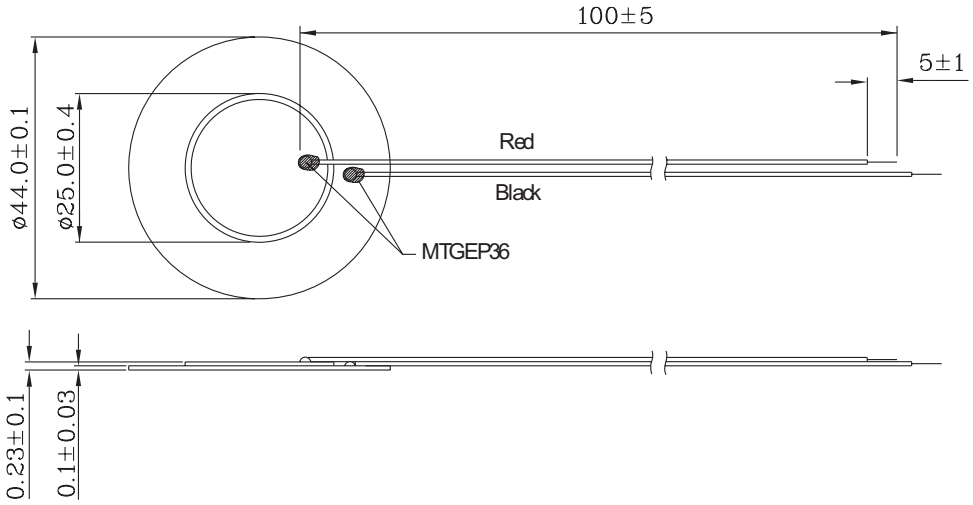

MEASURING METHOD

Resonant Frequency / Resonant Impedance

The piezo electric diaphragm shall be clamped at a node point as shown in the following figure to be free from any mechanical stress, and measured its resonant frequency and resonant impedance by using vector impedance analyzer or equivalent.
When the input frequency is swept within 100 Hz to 3 kHz, the resonant frequency is defined as the frequency where the impedance shows the minimum value, and this impedance shall be the resonant impedance.

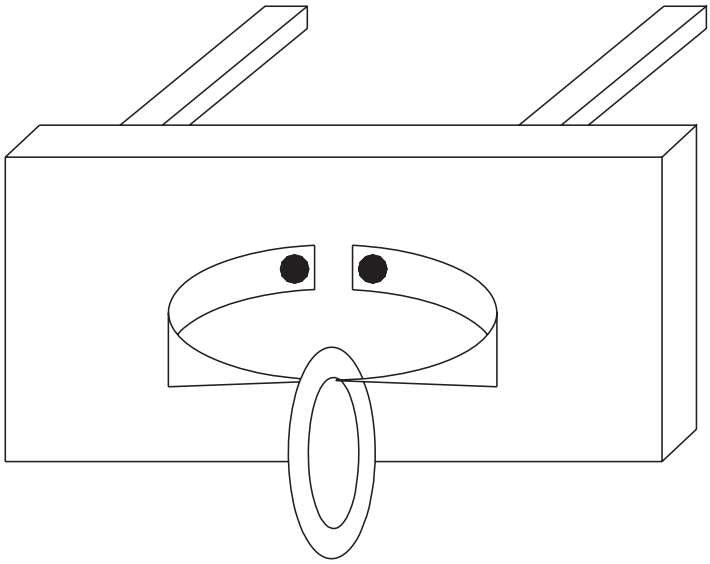

Static Capacitance

The electrostatic capacitance shall be measured at 120 Hz by using LCR meter HP4194A(H.P.) or equivalent. This part shall be clamped in the same way as the measurement of resonant frequency and resonant impedance as mentioned above.

REVISION HISTORY

rev.	description	date
1.0	initial release	07/28/2006
1.01	brand update	05/13/2020
1.02	logo, datasheet style update	08/05/2022

The revision history provided is for informational purposes only and is believed to be accurate.

CUI Devices offers a one (1) year limited warranty. Complete warranty information is listed on our website.

CUI Devices reserves the right to make changes to the product at any time without notice. Information provided by CUI Devices is believed to be accurate and reliable. However, no responsibility is assumed by CUI Devices for its use, nor for any infringements of patents or other rights of third parties which may result from its use.

CUI Devices products are not authorized or warranted for use as critical components in equipment that requires an extremely high level of reliability. A critical component is any component of a life support device or system whose failure to perform can be reasonably expected to cause the failure of the life support device or system, or to affect its safety or effectiveness.