CUI INC®

SERIES: 2.5-5 W Euro-blade USB | **DESCRIPTION:** AC-DC POWER SUPPLY

FEATURES

- up to 5 W power
- universal input (90~264 Vac)
- compact size
- over voltage and short circuit protections
- TUV safety approval
- level IV efficiency
- custom designs available

MODEL	output voltage (Vdc)	output current max (A)	output power max (W)	ripple and noise[1] max (mVp-p)	efficiency level
EPS050050UE-I38-SZ	5	0.5	2.5	150	IV
EPS050100UHE-I38-SZ	5	1	5	150	IV

Notes: 1. At full load, 100 ~ 240 Vac input, 20 MHz bandwidth oscilloscope, each output terminated with 10 µF aluminum electrolytic and 0.1 µF ceramic capacitors.

PART NUMBER KEY

EPS050050UE - I38 - SZ - CXX

- EPS050050UE: Base Number (example of 5 Vdc, 0.5 A)
- I38: DC Plug Type
- SZ: Factory Designation
- CXX: Reserved for Custom Configurations

DISCONTINUED

DISCONTINUED

INPUT

parameter	conditions/description	min	typ	max	units
voltage		90		264	Vac
frequency		47		63	Hz
current	0.5 A model 1 A model			1 2	A A
inrush current	at 115 V ac, cool start at 230 V ac, cool start			15 30	A A
no load power consumption	0.5 A model 1 A model			0.3 0.5	W W

OUTPUT

parameter	conditions/description	min	typ	max	units
line regulation			±1		%
load regulation	0.5 A model 1 A model		±0.3 ±0.25		% %

PROTECTIONS

parameter	conditions/description	min	typ	max	units
over voltage protection	clamped by internal protection zener				
short circuit protection	output shut down and auto restart				

SAFETY & COMPLIANCE

parameter	conditions/description	min	typ	max	units
isolation voltage	input to output at 10 mA for 1 minute			3,000 4,242	Vac Vdc
isolation resistance	input to output at 500 Vdc	100			MΩ
safety approvals	GS, CE				
EMI/EMC	0.5 A model: FCC part 15 class B, EN 55022B 1 A model: FCC class B, EN 55022B				
leakage current				0.25	mA
RoHS compliant	yes				

ENVIRONMENTAL

parameter	conditions/description	min	typ	max	units
operating temperature		0		40	°C
storage temperature		-10		70	°C
operating humidity		20		80	%
storage humidity		10		90	%

MECHANICAL

parameter	conditions/description	min	typ	max	units
dimensions	2.874 x 1.142 x 1.594 (73 x 29 x 40.5 mm)				inch
input plug	Direct plug-in VDE type				
weight			58		g

MECHANICAL DRAWING (0.5 A model)

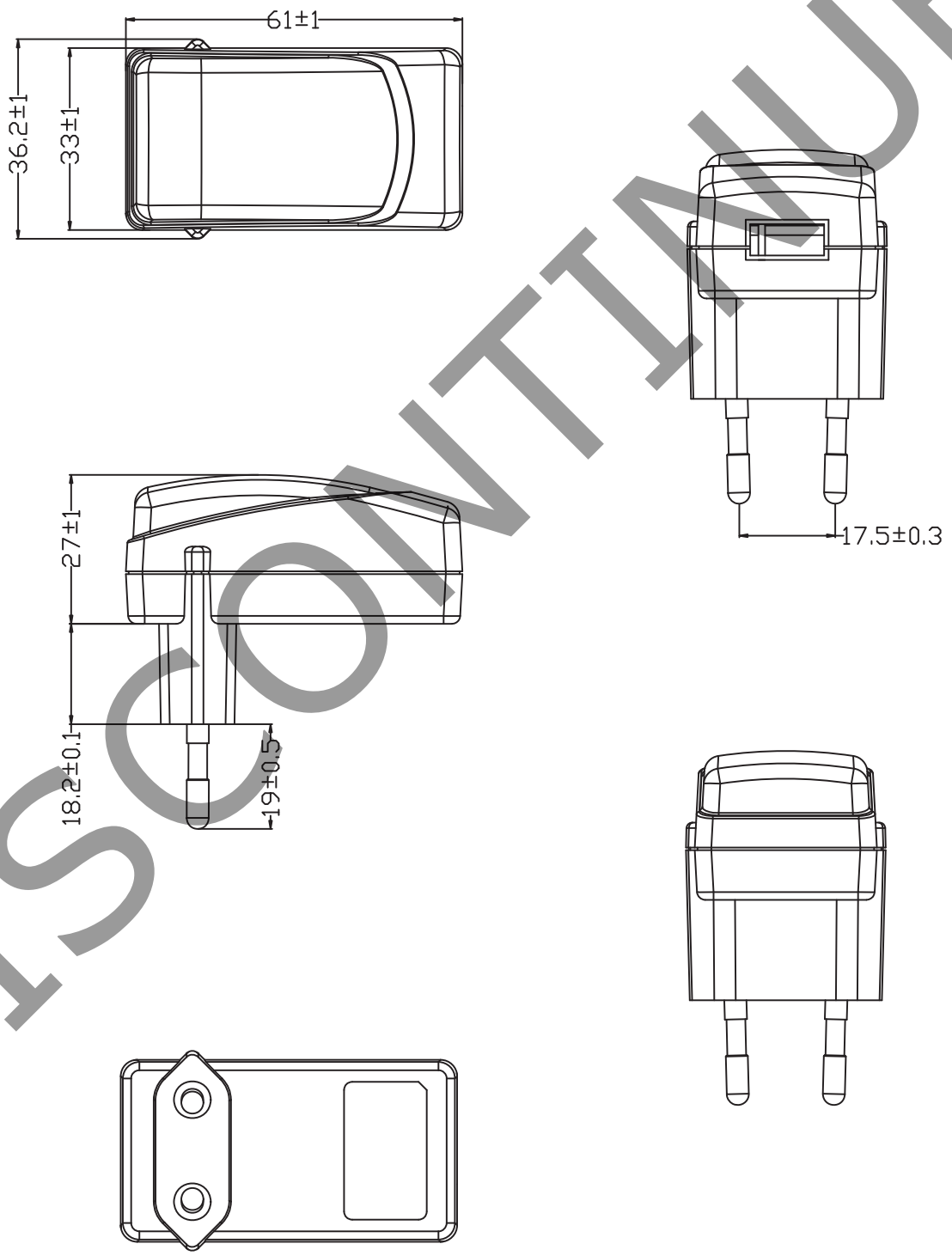

DISCONTINUED

MECHANICAL

parameter	conditions/description	min	typ	max	units
dimensions	2.402 x 1.299 x 1.063 (61 x 33 x 27 mm)				inch
input plug	Direct plug-in VDE type				
weight			58		g

MECHANICAL DRAWING (1 A model)

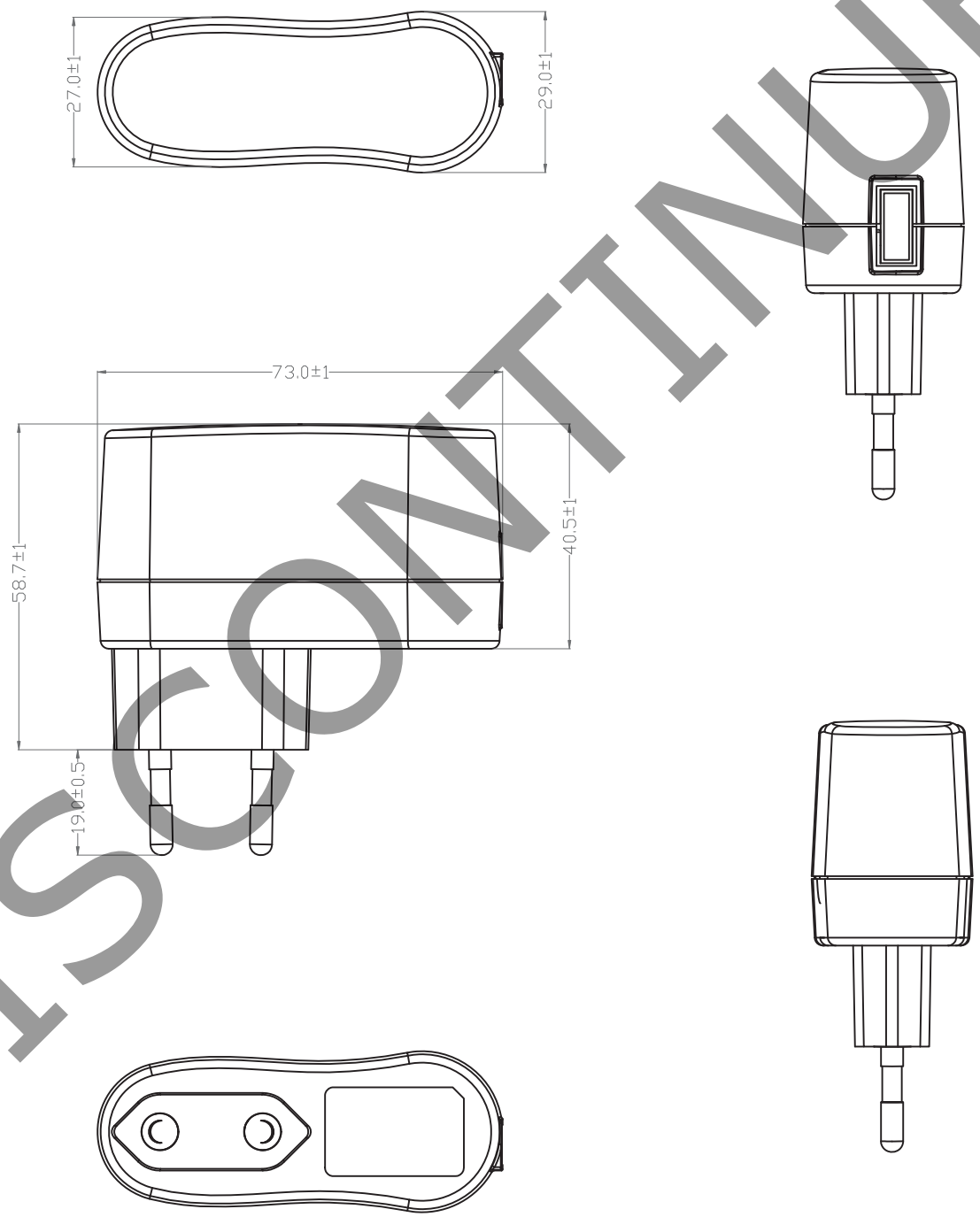

DISCONTINUED

REVISION HISTORY

rev.	description	date
1.0	initial release	07/16/2008
1.01	new template applied	08/06/2009
1.02	V-Infinity branding removed	08/21/2012

The revision history provided is for informational purposes only and is believed to be accurate.

DISCONTINUED

CUI INC®

Headquarters
20050 SW 112th Ave.
Tualatin, OR 97062
800.275.4899

Fax 503.612.2383
cui.com
techsupport@cui.com

This device complies with part 15 of the FCC Rules. Operation is subject to the following two conditions:
(1) This device may not cause harmful interference, and
(2) this device must accept any interference received, including interference that may cause undesired operation.

CUI offers a one (1) year limited warranty. Complete warranty information is listed on our website.

CUI reserves the right to make changes to the product at any time without notice. Information provided by CUI is believed to be accurate and reliable. However, no responsibility is assumed by CUI for its use, nor for any infringements of patents or other rights of third parties which may result from its use.

CUI products are not authorized or warranted for use as critical components in equipment that requires an extremely high level of reliability. A critical component is any component of a life support device or system whose failure to perform can be reasonably expected to cause the failure of the life support device or system, or to affect its safety or effectiveness.