CUI INC
a bel group

SERIES: VSK-S3 | DESCRIPTION: AC-DC POWER SUPPLY

FEATURES

- up to 3 W continuous power
- compact board mount design
- universal input (85~264 Vac / 110~370 Vdc)
- single output from 3.3~24 V
- over voltage, over temperature, and short circuit protections
- UL/cUL safety approvals
- efficiency up to 78%

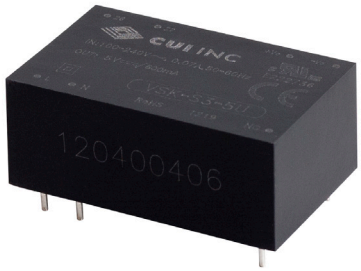

MODEL	output voltage (Vdc)	output current max (A)	output power max (W)	ripple and noise[1] typ (mVp-p)	efficiency typ (%)
VSK-S3-3R3U	3.3	0.7	2.3	30	63
VSK-S3-5U*	5	0.6	3	30	72
VSK-S3-9U	9	0.33	3	30	74
VSK-S3-12U	12	0.25	3	30	76
VSK-S3-15U*	15	0.2	3	30	76
VSK-S3-24U*	24	0.125	3	30	78

Notes: 1. Ripple and noise measured at 20 MHz bandwidth
2. * Discontinued model.

PART NUMBER KEY

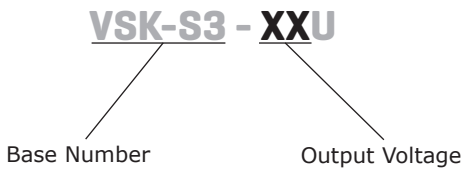

INPUT

parameter	conditions/description	min	typ	max	units
voltage		85 110		264 370	Vac Vdc
frequency		47		440	Hz
current	at 110 Vac at 230 Vac		65 30		mA mA
inrush current	at 110 Vac at 230 Vac		10 20		A A
external input fuse (recommended)	slow blow, 250 V		0.5		A

OUTPUT

parameter	conditions/description	min	typ	max	units
line regulation			±0.5		%
load regulation	10 ~ 100%		±1		%
temperature coefficient			0.02		%/°C
hold-up time	at 230 Vac		50		ms
voltage accuracy	3.3 V model all other models		±3 ±2		% %
switching frequency			100		kHz

PROTECTIONS

parameter	conditions/description	min	typ	max	units
over voltage protection	chip lock up				
short circuit protection	auto recovery with no damage from a short on any output				
over temperature protection				150	°C

SAFETY & COMPLIANCE

parameter	conditions/description	min	typ	max	units
isolation voltage	primary to secondary (for 1 minute)	3,000			Vac
safety approvals	UL 60950-1				
safety class	class II				
EMI/EMC	EN 55022 (level A), IEC/EN 61000-4-2 (level 4, 8kV/15kV), IEC/EN 61000-4-3, IEC/EN 61000-4-4 (level 3, 2kV), IEC/EN 61000-4-5 (level 3, 1kV/2kV)				
MTBF	25°C	300,000			hrs
RoHS	2011/65/EU				

ENVIRONMENTAL

parameter	conditions/description	min	typ	max	units
operating temperature		-25		70	°C
storage temperature		-40		105	°C
case temperature				95	°C
operating humidity	non-condensing			95	%

DERATING CURVES

TEMPERATURE DERATING CURVE

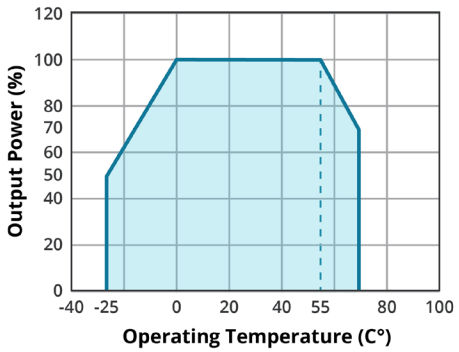

INPUT VOLTAGE DERATING CURVE

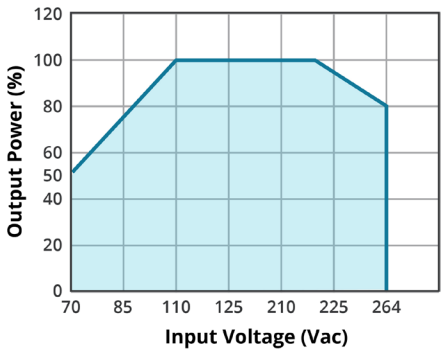

MECHANICAL

parameter	conditions/description	min	typ	max	units
dimensions	1.457 x 0.908 x 0.591 (37.0 x 23.0 x 15.0 mm)				inch
case material	UL94V-0				
weight			25		g

MECHANICAL DRAWING

units: mm [inches]
tolerance: ±0.5 [±0.02]
pin section tolerance: ±0.10 [±0.004]

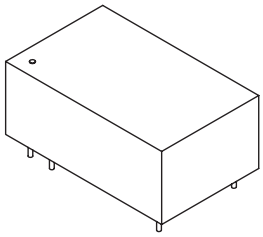

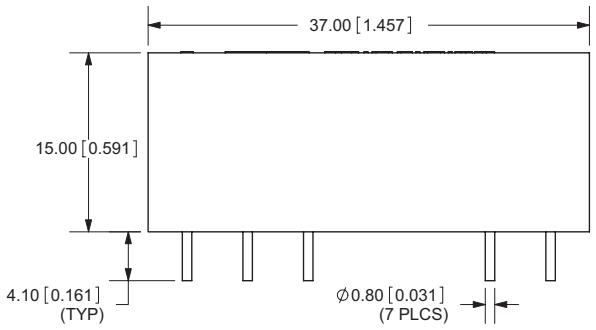

PIN CONNECTIONS	
PIN	FUNCTION
1	L
3	N
13	N/C
14	0V
16	+Vo
22	+Vin(DC)
26	-Vin(DC)

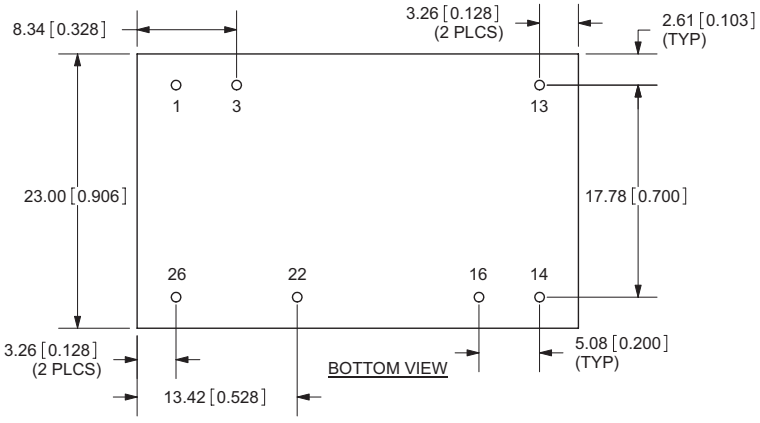

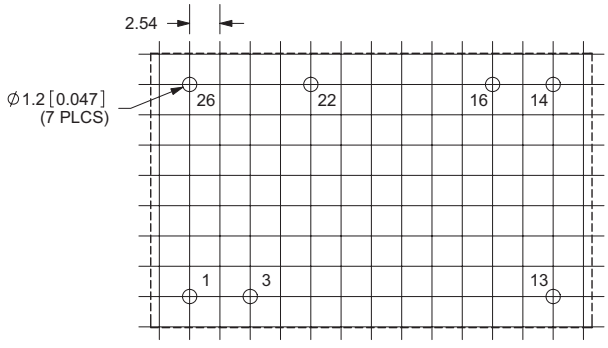

RECOMMENDED FOOTPRINT
TOP VIEW

TYPICAL APPLICATION CIRCUIT

Figure 1

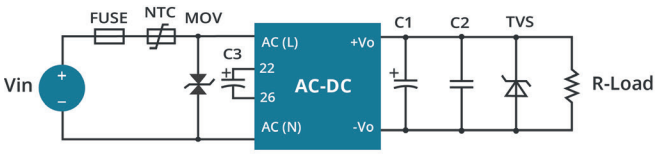

Figure 2
VSK-S3 EMC Filtering Circuit

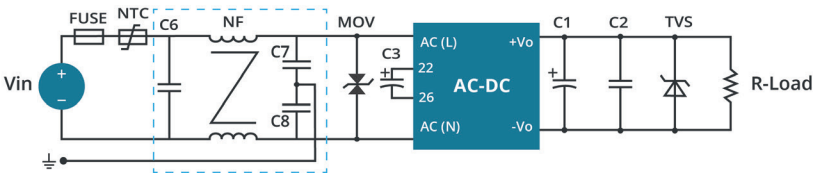

EXTERNAL CAPACITORS TYPICAL VALUE (Unit: μF)				
MODEL	C1	C2	C3	TVS
VSK-S3-3R3U	150	0.1	4.7/400V	P4KE6.8A
VSK-S3-5U	150	0.1	4.7/400V	P4KE6.8A
VSK-S3-9U	150	0.1	4.7/400V	P4KE12A
VSK-S3-12U	150	0.1	4.7/400V	P4KE20A
VSK-S3-15U	150	0.1	4.7/400V	P4KE20A
VSK-S3-24U	150	0.1	4.7/400V	P4KE30A

Notes:
1. Output filtering capacitors C1, C3 is electrolytic capacitors, It is recommended to use high frequency and low impedance electrolytic capacitors. For capacitance and current of capacitor please refer to manufacture's datasheet. Voltage derating of apacitor should be 80% or above. C2, C4 is ceramic capacitors , it is used to filter high frequency noise. TVS is a recommended component to protect post-circuits (when converter fails).
2. MOV is required for VSK-S3 models. Model: 471KD05, it is used to protect the device under surge.
3. It is recommended to connect FUSE, the parameter is 0.5A/250V slow blow. External input NTC is recommended to use D -14 or 10Ω/2W wire-round resistor.
4. If EMC performance is required, recommended to add "EMC filter" at the input end(see figure 2) C6:X capacitor, recommended parameter 0.1uF/275V; C7,C8:Y capacitor, recommended parameter 220pF/275V; NF: common model choke, recommended inductance is about 10mH-30mH.
5. Terminals 22 and 26 are internal rectification and filtering terminals. To protect the models further, it is recommended to connect an electrolytic capacitor C3 (it is recommended to be 4.7uF/400V). If operation voltage of the module is between 160~264VAC, C3 can be removed.

Note: 1. All specifications measured at Ta=25°C, humidity <75%, rated input voltage, and rated output load, unless otherwise specified.

REVISION HISTORY

rev.	description	date
1.0	initial release	02/27/2009
1.01	new template applied	04/10/2012
1.02	V-Infinity branding removed	08/15/2012
1.03	updated spec	03/31/2014
1.04	company logo update	10/30/2020
1.05	UKCA mark added, derating curves and circuit figures updated	06/01/2022
1.06	discontinued models VSK-S3-5U, VSK-S3-15U & VSK-S3-24U	01/11/2024

The revision history provided is for informational purposes only and is believed to be accurate.

CUI INC
a bel group

Headquarters
20050 SW 112th Ave.
Tualatin, OR 97062
800.275.4899

Fax 503.612.2383
cui.com
techsupport@cui.com

CUI offers a two (2) year limited warranty. Complete warranty information is listed on our website.

CUI reserves the right to make changes to the product at any time without notice. Information provided by CUI is believed to be accurate and reliable. However, no responsibility is assumed by CUI for its use, nor for any infringements of patents or other rights of third parties which may result from its use.

CUI products are not authorized or warranted for use as critical components in equipment that requires an extremely high level of reliability. A critical component is any component of a life support device or system whose failure to perform can be reasonably expected to cause the failure of the life support device or system, or to affect its safety or effectiveness.