CUDEVICES

MODEL: PJ-071 | **DESCRIPTION:** DC POWER JACK

FEATURES

- 3 conductor
- shielded
- low profile

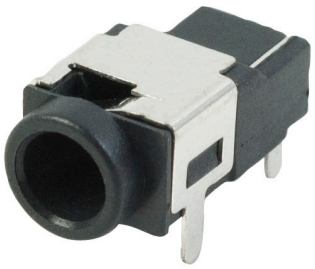

RoHS

SPECIFICATIONS

parameter	conditions/description	min	typ	max	units
rated input voltage			24		Vdc
rated input current				2	A
contact resistance				30	mΩ
insulation resistance	at 500 Vdc	100			MΩ
voltage withstand	for 1 minute			500	Vac
insertion/withdrawal force		0.3		3	kg
terminal strength	any direction for 10 seconds			500	g
operating temperature		-25		85	°C
life			5,000		cycles
flammability rating	UL94V-0				
RoHS	yes				

SOLDERABILITY

parameter	conditions/description	min	typ	max	units
wave soldering	dipped in solder pot for 5 ±5 seconds at	255	260	265	°C

MECHANICAL DRAWING

units: mm
tolerance:
X. ±0.50 mm
X.X ±0.30 mm
X.XX ±0.20 mm
PCB: ±0.05 mm
unless otherwise specified

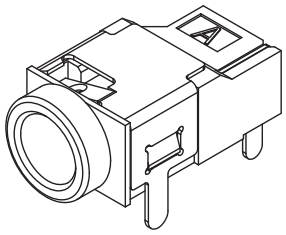

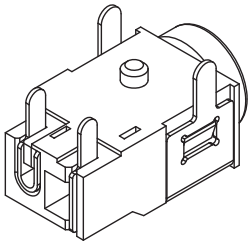

DESCRIPTION	MATERIAL	PLATING/COLOR
center pin	brass	tin
terminal 1	brass	tin
terminal 2	copper alloy	tin
terminal 3	brass	tin
housing	PBT (UL94V-0)	black

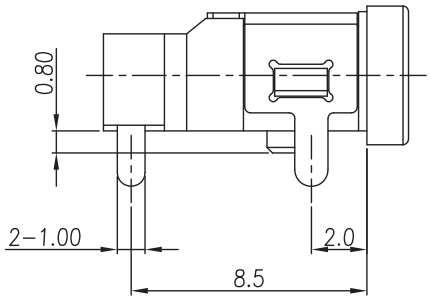

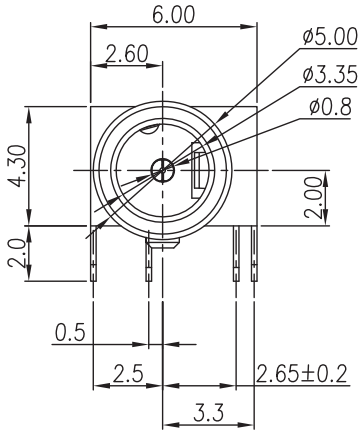

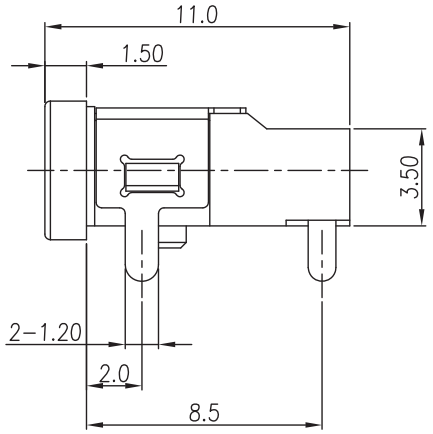

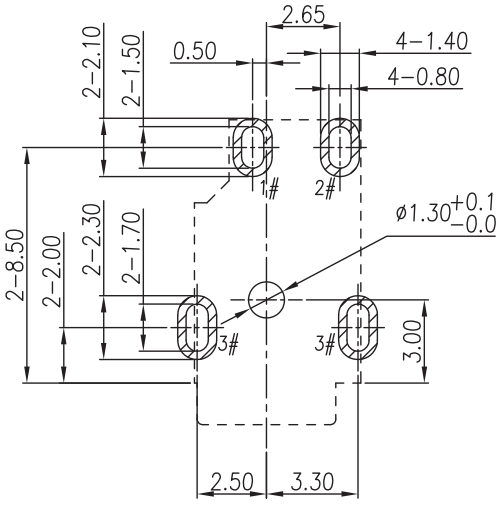

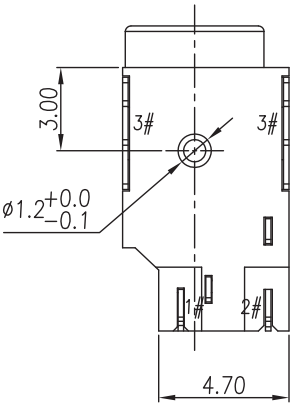

Recommended PCB Layout
Top View

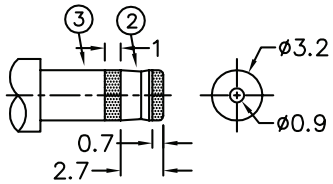

MATING PLUG
Jack Insertion Depth: 7 mm

Schematic	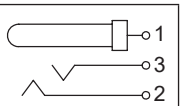
Model	Center Pin
PJ-071	Ø0.8 mm

REVISION HISTORY

rev.	description	date
1.0	initial release	03/16/2012
1.01	increased voltage rating	05/09/2016
1.02	brand update	10/22/2019
1.03	logo, datasheet style update	08/05/2022
1.04	product reengineered for improved manufacturability and production yield, see PCN for details	10/09/2023

The revision history provided is for informational purposes only and is believed to be accurate.

CUI Devices offers a one (1) year limited warranty. Complete warranty information is listed on our website.

CUI Devices reserves the right to make changes to the product at any time without notice. Information provided by CUI Devices is believed to be accurate and reliable. However, no responsibility is assumed by CUI Devices for its use, nor for any infringements of patents or other rights of third parties which may result from its use.

CUI Devices products are not authorized or warranted for use as critical components in equipment that requires an extremely high level of reliability. A critical component is any component of a life support device or system whose failure to perform can be reasonably expected to cause the failure of the life support device or system, or to affect its safety or effectiveness.

cuidevices.com