Additional Resources: Product Page

REV.	DESCRIPTION	DATE
A	NEW DRAWING	9/15/2008

1

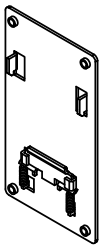

DIN RAIL BRACKET
QTY: 1

2

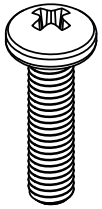

M3X0.5
12mm length
QTY: 4

3

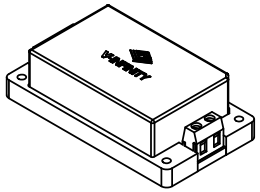

V-INFINITY
AC/DC CONVERTER
QTY: 1
(sold separately)

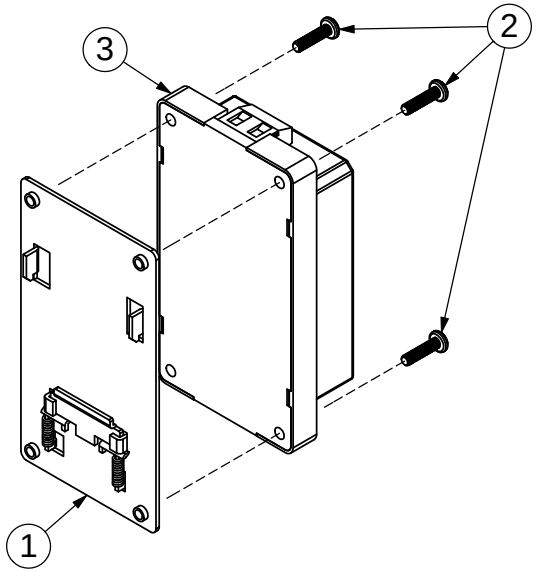

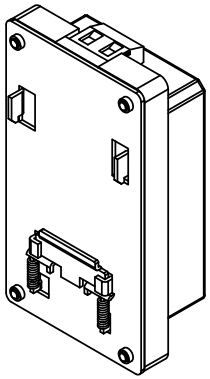

TITLE: DIN RAIL MOUNTING BRACKET ASSEMBLY INSTRUCTIONS		REV: A
PART NO. FSC-S15-DIN	UNITS: MM [INCHES]	
DRAWN BY: ZRJ	APPROVED BY:	SCALE: 1:2

PC FILE NAME: FSC-S15-DIN

COPYRIGHT 2008 BY CUI INC.

Additional Resources: Product Page

REV.	DESCRIPTION	DATE
A	NEW DRAWING	9/15/2008

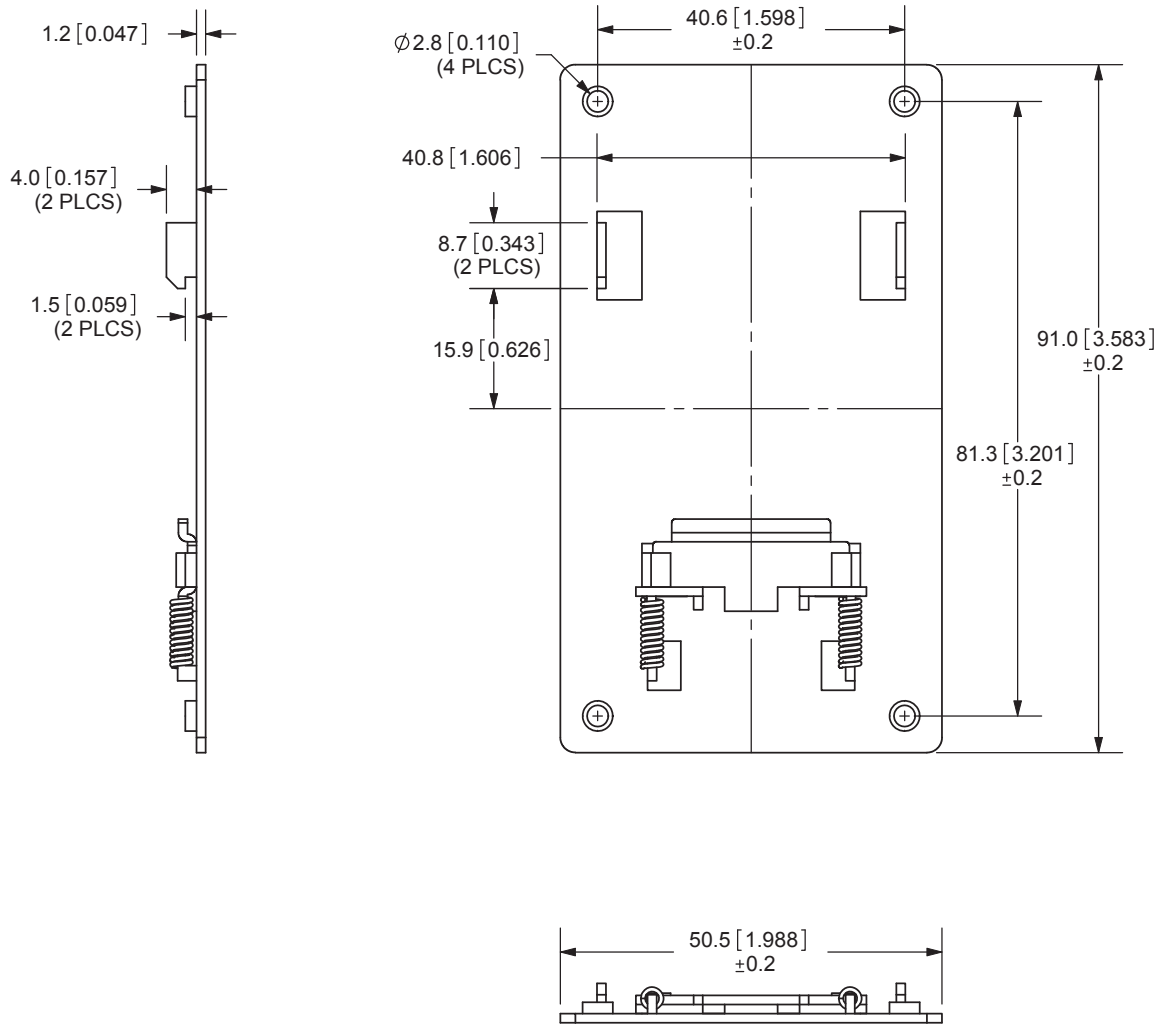

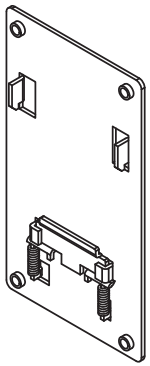

SCALE: 1:2

TOLERANCE:
±0.3mm UNLESS OTHERWISE SPECIFIED

RoHS

CUI INC

20050 SW 112th Ave.
Tualatin, OR 97062
Phone: 503-612-2300
800-275-4899
Fax: 503-612-2383
Website: www.cui.com

TITLE: DIN RAIL MOUNTING BRACKET ASSEMBLY INSTRUCTIONS		REV: A
PART NO. DIN RAIL BRACKET	UNITS: MM [INCHES]	
DRAWN BY: ZRJ	APPROVED BY:	SCALE: 1:1

PC FILE NAME:

COPYRIGHT 2008 BY CUI INC.