CUDEVICES

MODEL: CST-951RP-A | **DESCRIPTION:** MAGNETIC BUZZER TRANSDUCER

FEATURES

- side port
- SPL 85 dB
- low profile

RoHS

SPECIFICATIONS

parameter	conditions/description	min	typ	max	units
rated voltage			5.0		Vo-p
operating voltage		4.0		6.0	Vo-p
current consumption	at rated voltage, 2,730 Hz square wave, ½ duty			80	mA
coil resistance		25.5	30.0	34.5	Ω
sound pressure level	at 10 cm	85	92		dB
rated frequency			2,730		Hz
dimensions	ø9.0 x H4.5				mm
weight			0.6		g
material	PPO				
terminal	pin type (Au plating)				
operating temperature		-20		60	°C
storage temperature		-30		70	°C
RoHS	yes				

Note: 1. Not recommended for wave soldering

MECHANICAL DRAWING

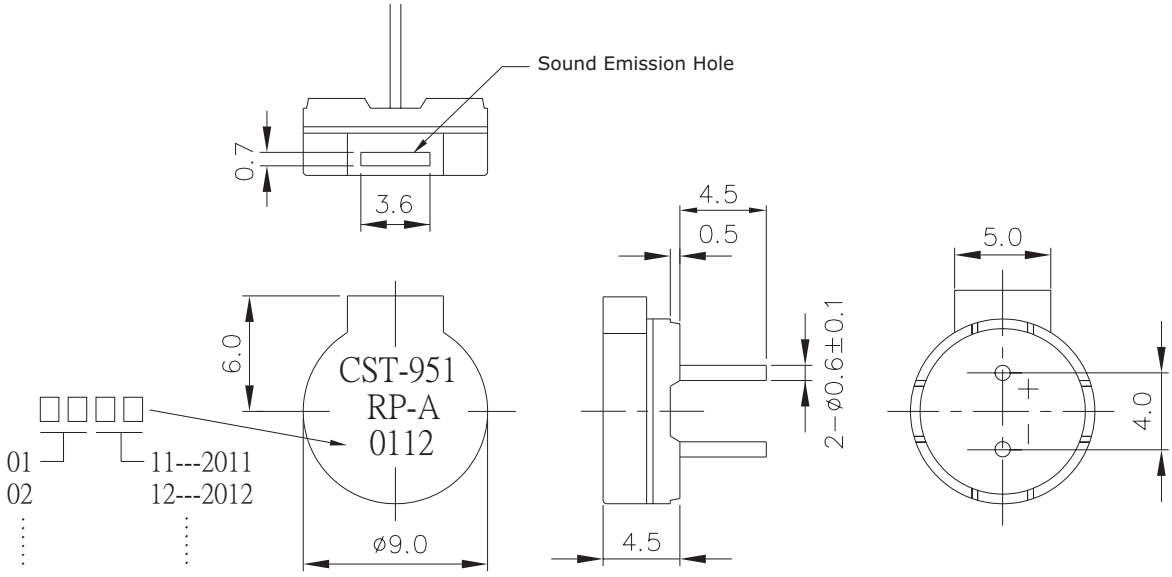

FREQUENCY RESPONSE CURVE

A: frequency response. Magn dB re 20.00µPA

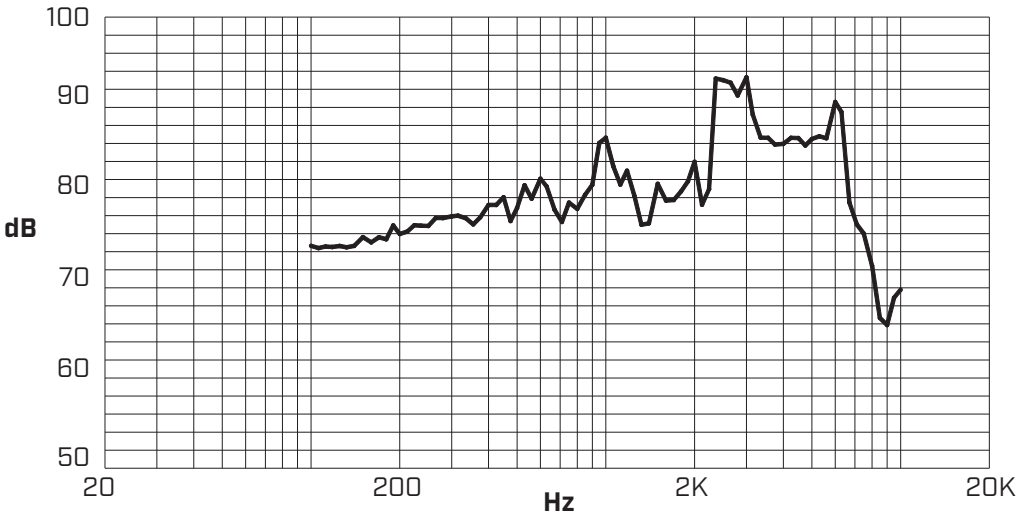

MEASUREMENT METHOD

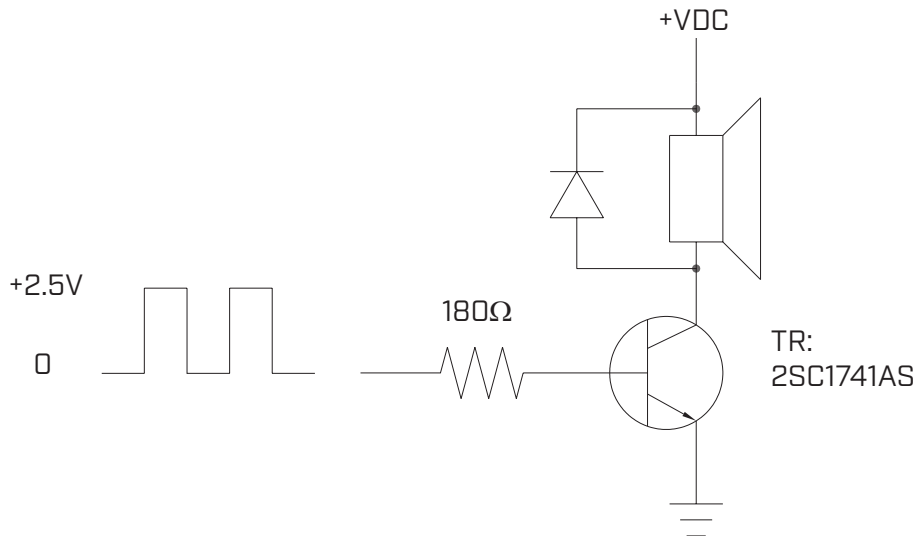

REVISION HISTORY

rev.	description	date
1.0	initial release	01/30/2006
1.01	updated template and model number	03/28/2012
1.02	added soldering note	07/02/2013
1.03	logo, datasheet style update	08/05/2022

The revision history provided is for informational purposes only and is believed to be accurate.

CUI Devices offers a one (1) year limited warranty. Complete warranty information is listed on our website.

CUI Devices reserves the right to make changes to the product at any time without notice. Information provided by CUI Devices is believed to be accurate and reliable. However, no responsibility is assumed by CUI Devices for its use, nor for any infringements of patents or other rights of third parties which may result from its use.

CUI Devices products are not authorized or warranted for use as critical components in equipment that requires an extremely high level of reliability. A critical component is any component of a life support device or system whose failure to perform can be reasonably expected to cause the failure of the life support device or system, or to affect its safety or effectiveness.

cuidevices.com