CUDEVICES



# **MODEL:** CPE-400AC | **DESCRIPTION:** PIEZO BUZZER INDICATOR

## FEATURES

- wire lead with panel-mount tabs
- 12 Vac rating
- 89 dB
- 3.1 kHz rated frequency

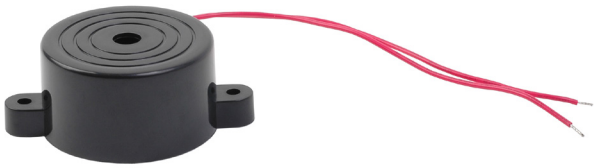

RoHS

## SPECIFICATIONS

| parameter | conditions/description | min | typ | max | units |
|---|---|---|---|---|---|
| rated voltage | | | 12 | | Vac |
| operating voltage | | 3 | | 30 | Vac/Vdc |
| current consumption | at rated voltage | | | 8 | mA |
| rated frequency | | 2,600 | 3,100 | 3,600 | Hz |
| sound pressure level | at 30 cm, rated voltage | 89 | | | dB |
| dimensions | Ø41.8 x 22.0 | | | | mm |
| weight | | | | 15.7 | g |
| material | ABS UL94 1/16" HB | | | | |
| terminal | wire leads | | | | |
| operating temperature | | -30 | | 85 | °C |
| storage temperature | | -40 | | 95 | °C |
| RoHS | yes | | | | |

Notes: 1. All specifications measured at 5~35°C, humidity at 45~85%, under 86~106kPa pressure, unless otherwise noted.

## MECHANICAL DRAWING

units: mm
tolerance: ±0.5 mm

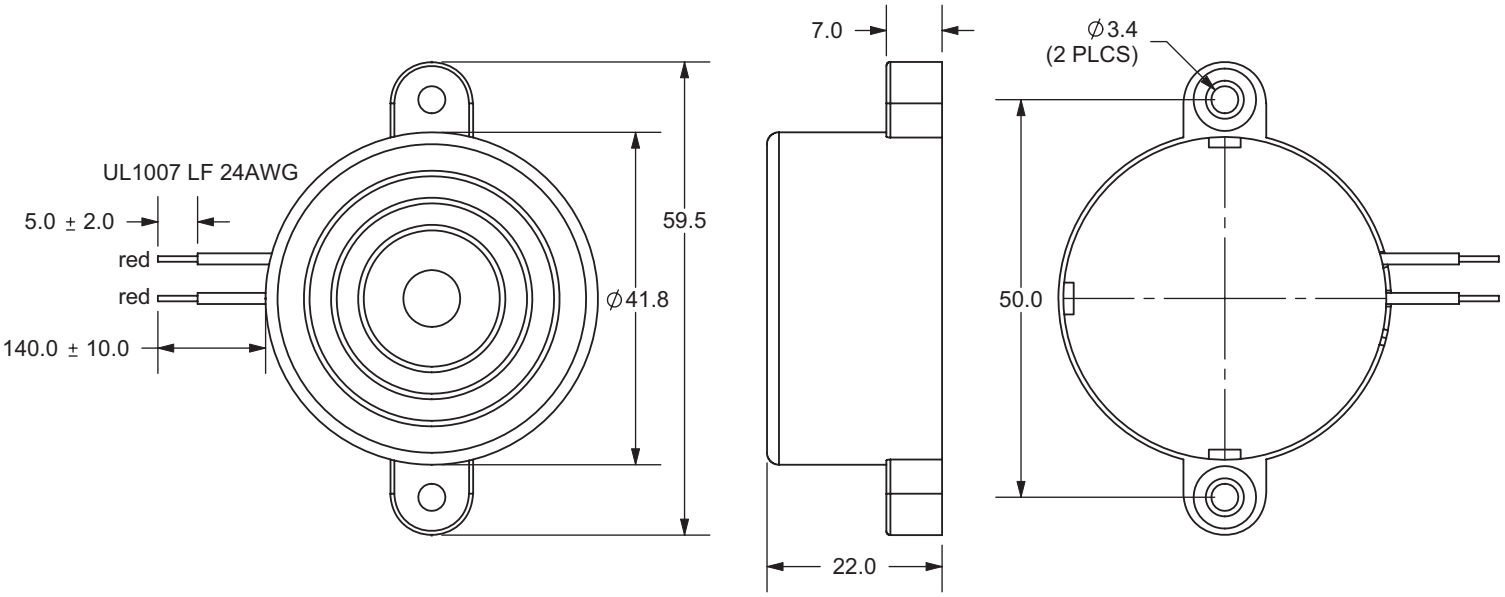


## PERFORMANCE CURVES

P: Voltage vs. Sound Pressure Level
I: Voltage vs. Current Consumption

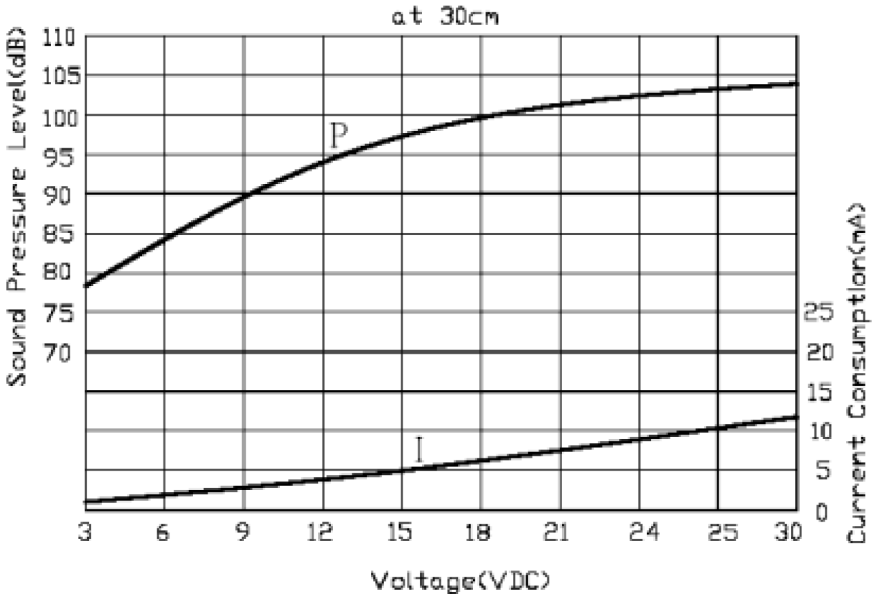

## REVISION HISTORY

| rev. | description | date |
|---|---|---|
| 1.0 | initial release | 11/12/2007 |
| 1.01 | brand update | 12/16/2019 |
| 1.02 | logo, datasheet style update | 08/05/2022 |

The revision history provided is for informational purposes only and is believed to be accurate.

CUI Devices offers a one (1) year limited warranty. Complete warranty information is listed on our website.

CUI Devices reserves the right to make changes to the product at any time without notice. Information provided by CUI Devices is believed to be accurate and reliable. However, no responsibility is assumed by CUI Devices for its use, nor for any infringements of patents or other rights of third parties which may result from its use.

CUI Devices products are not authorized or warranted for use as critical components in equipment that requires an extremely high level of reliability. A critical component is any component of a life support device or system whose failure to perform can be reasonably expected to cause the failure of the life support device or system, or to affect its safety or effectiveness.

**cuidevices.com**