CUDEVICES

SERIES: CP125 | **DESCRIPTION:** PELTIER MODULE

FEATURES

- arcTEC™ structure
- solid state device
- precise temperature control
- quiet operation

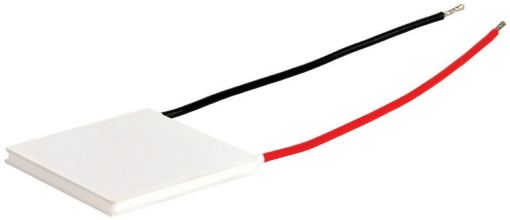

RoHS

MODEL

MODEL	input voltage[1] max (Vdc)	input current[2] max (A)	output Qmax[3] T_h=27°C (W)	output Qmax[3] T_h=50°C (W)	output ΔTmax[4] T_h=27°C (°C)	output ΔTmax[4] T_h=50°C (°C)
CP12437	15.4	12.5	110	121	68	75

Notes:
1. Maximum voltage at ΔT max and T_h=27°C
2. Maximum current to achieve ΔT max
3. Maximum heat absorbed at cold side occurs at I_{max}, V_{max}, and ΔT=0°C
4. Maximum temperature difference occurs at I_{max}, V_{max}, and Q=0W (ΔT max measured in a vacuum at 1.3 Pa)

PART NUMBER KEY

CP12 X 37

Base Number

Length x Width:
4 = 40 x 40 mm

SPECIFICATIONS

parameter	conditions/description	min	typ	max	units
internal resistance[1]		0.855	0.95	1.045	Ω
solder melting temperature	connection between thermoelectric pairs	235			°C
assembly compression				1	MPa
hot side plate				80	°C
RoHS	yes				

Note: 1. Measured by AC 4-terminal method at 25°C

MECHANICAL DRAWING

units: mm

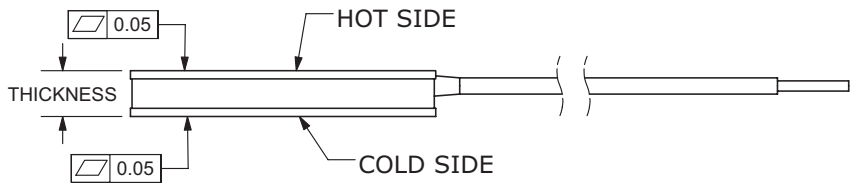

	MATERIAL	PLATING
ceramic plate	96% AL_2O_3	
wire leads	18 AWG	tin
sealer	silicon rubber 703 RTV (between cold and hot side plates)	
joint cover	silicon rubber 703 RTV	
marking	P/N & S/N printed on cold side surface	

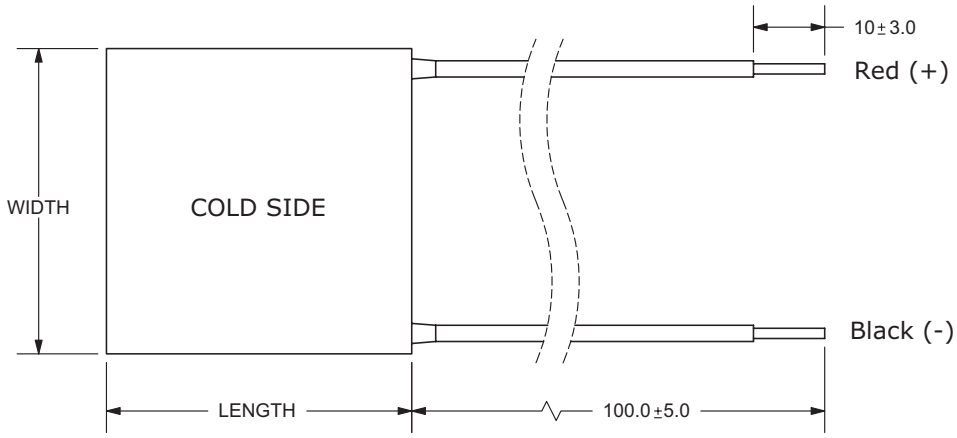

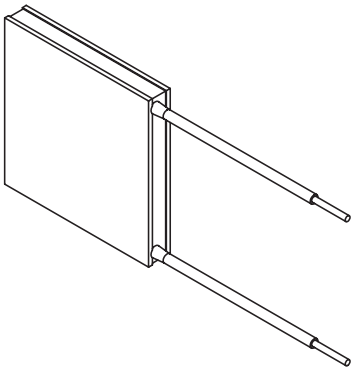

MODEL NO.	LENGTH (mm)	WIDTH (mm)	THICKNESS (mm)
CP12437	40 ±0.3	40 ±0.3	3.7 ±0.1

PERFORMANCE (Th=27°C)

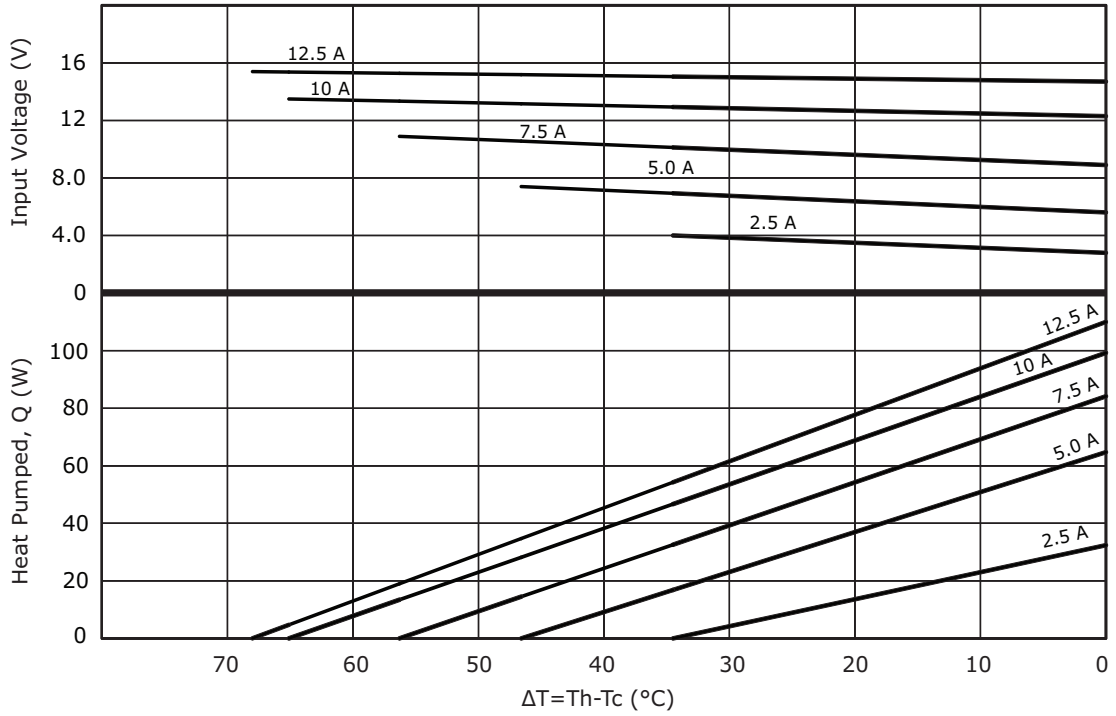

PERFORMANCE (Th=50°C)

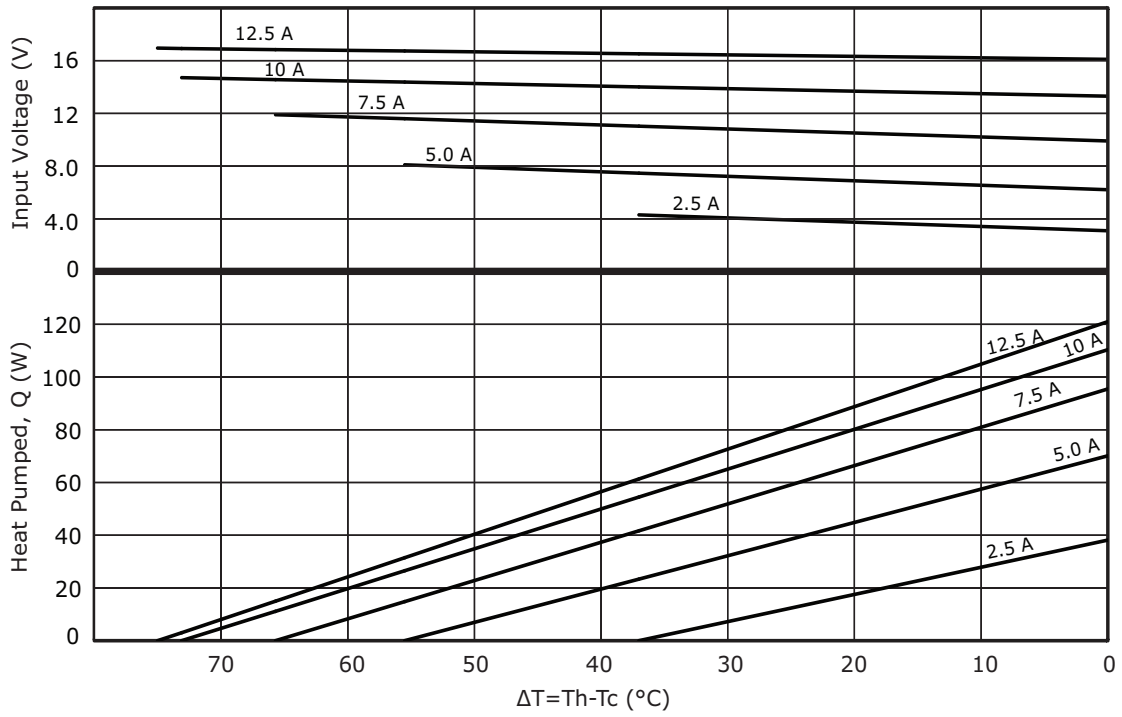

REVISION HISTORY

rev.	description	date
1.0	initial release	09/08/2016
1.01	changed to arcTEC™ structure	12/01/2017
1.02	brand update	10/28/2019
1.03	logo, datasheet style update	08/05/2022

The revision history provided is for informational purposes only and is believed to be accurate.

CUI Devices offers a one (1) year limited warranty. Complete warranty information is listed on our website.

CUI Devices reserves the right to make changes to the product at any time without notice. Information provided by CUI Devices is believed to be accurate and reliable. However, no responsibility is assumed by CUI Devices for its use, nor for any infringements of patents or other rights of third parties which may result from its use.

CUI Devices products are not authorized or warranted for use as critical components in equipment that requires an extremely high level of reliability. A critical component is any component of a life support device or system whose failure to perform can be reasonably expected to cause the failure of the life support device or system, or to affect its safety or effectiveness.