CUDEVICES

MODEL: CMI-1275C-050 | **DESCRIPTION:** MAGNETIC BUZZER INDICATOR

FEATURES

- includes driving circuit
- wave solderable
- washable

RoHS

SPECIFICATIONS

parameter	conditions/description	min	typ	max	units
rated voltage			5.0		Vdc
operating voltage		3.0		7.0	Vdc
current consumption				30	mA
rated frequency		2,800	3,100	3,400	Hz
sound pressure level	at 10 cm (A-weight), rated voltage	83	90		dBA
dimensions	Ø12.0 x 7.5				mm
weight			1.5		g
material	PBT+15% Glass				
terminal	pin type (Sn plating)				
operating temperature		-20		70	°C
storage temperature		-30		80	°C
RoHS	yes				

Notes: 1. All specifications measured at 5~35°C, humidity at 45~85%, under 86~106 kPa pressure, unless otherwise noted.

SOLDERABILITY

parameter	conditions/description	min	typ	max	units
wave soldering	see recommended wave soldering profile			250	°C

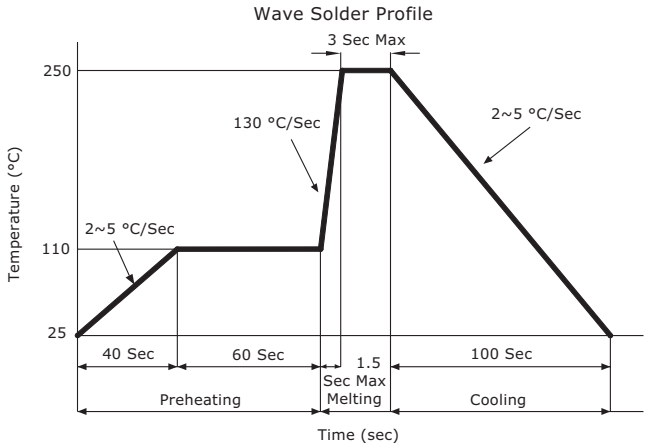

MECHANICAL DRAWING

units: mm
tolerance: ±0.5 mm

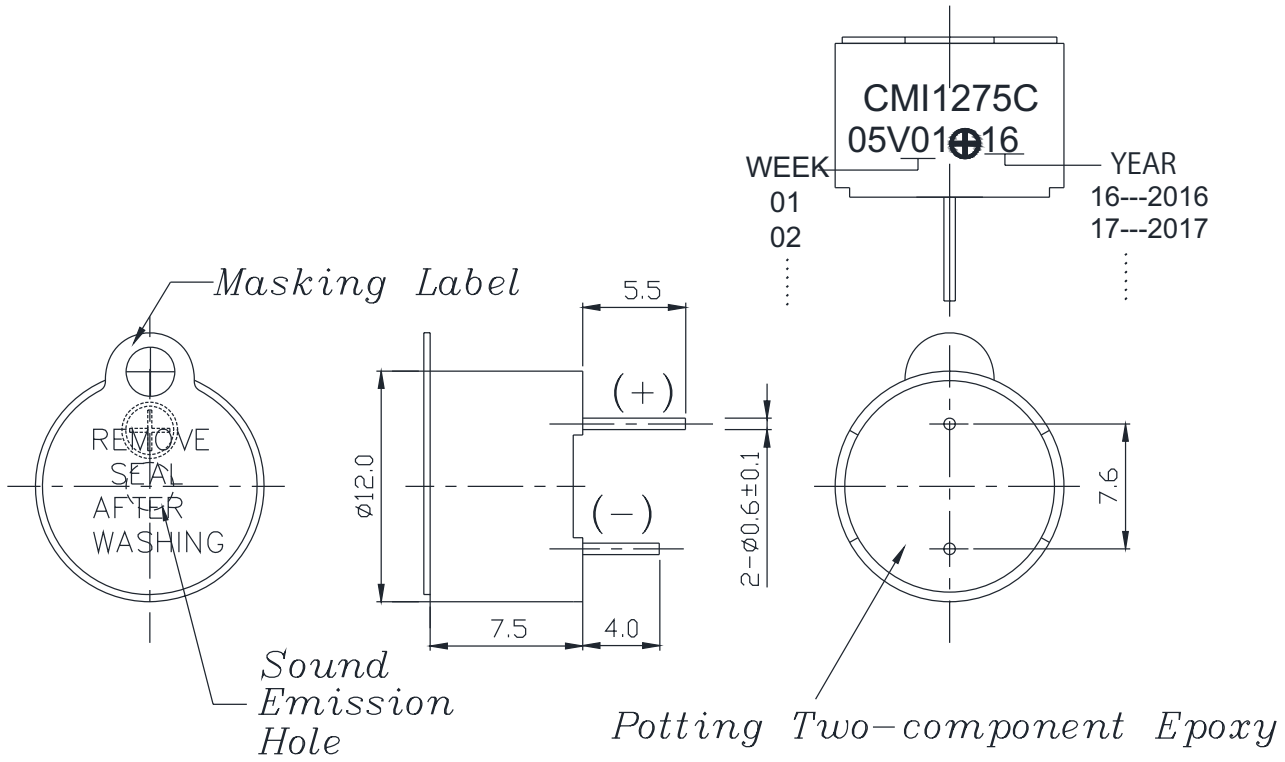

PERFORMANCE CURVES

Voltage vs. Sound Pressure Level
at 10 cm, 25°C

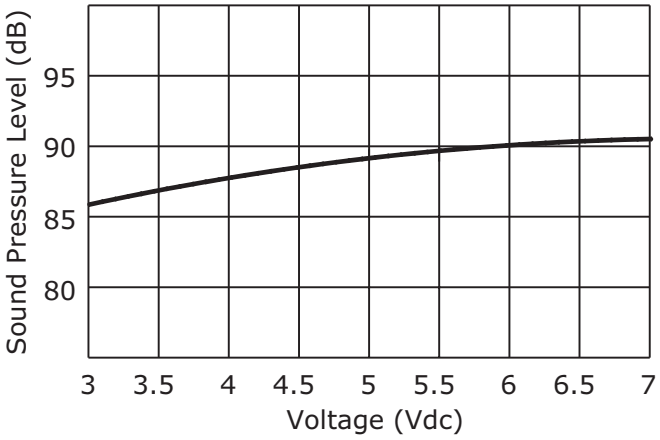

Voltage vs. Current Consumption
at 25°C

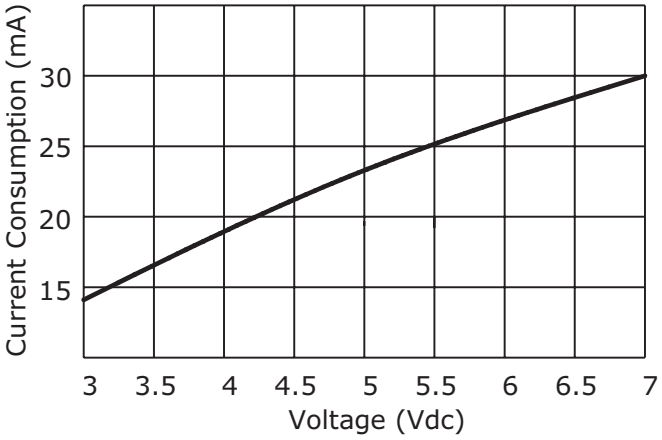

PACKAGING

units: mm

Tray Size: 184 x 184 x 23 mm
Carton Size: 440 x 400 x 310 mm
Tray QTY: 100 pcs per tray
Carton QTY: 6,000 pcs per carton

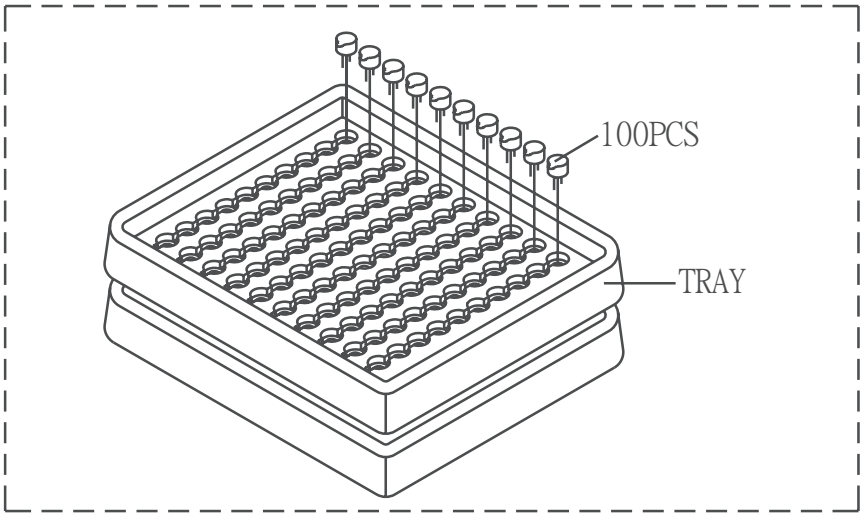

Lot No.	XXXXXXXXXX
Model No.	XXXXXXXXXX
Quantity.	XXXX Pcs
Date: DD MM YY G MADE IN CHINA	

The label is placed on the inner boxes and outer carton.

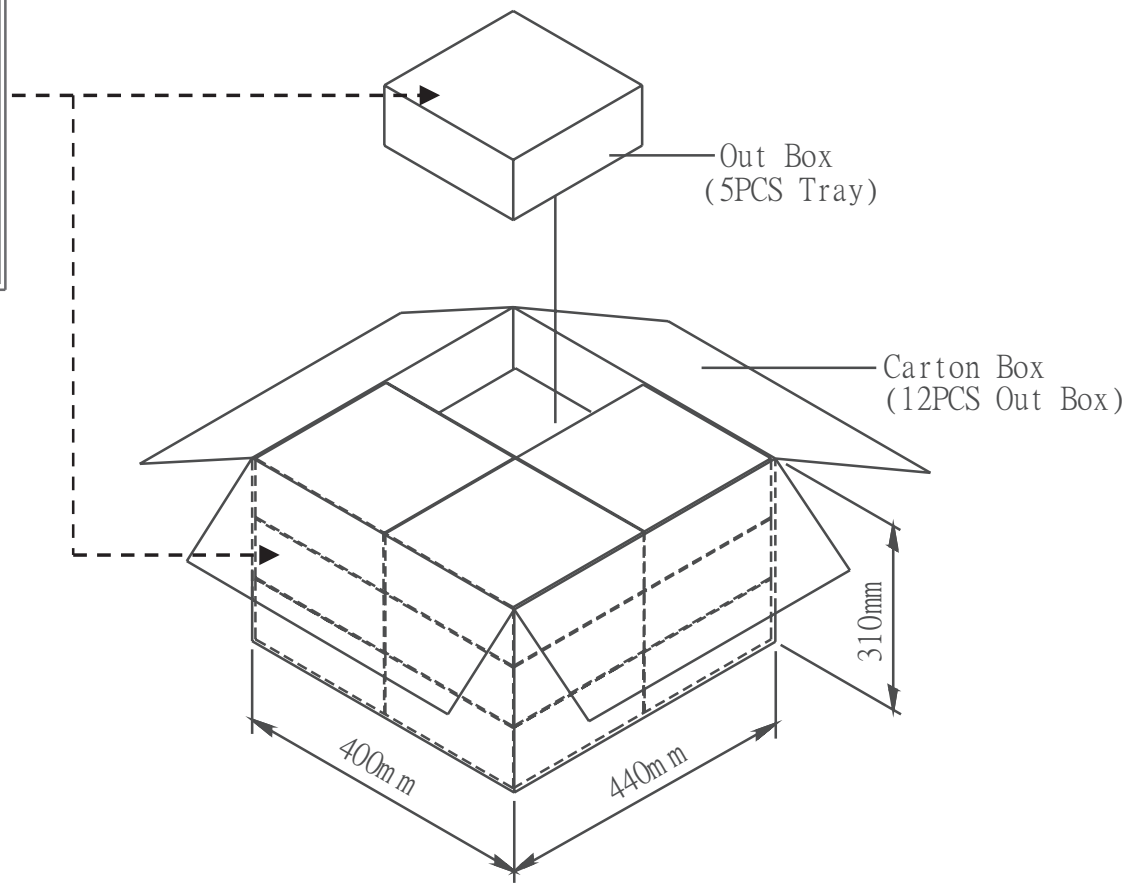

REVISION HISTORY

rev.	description	date
1.0	initial release	03/30/2016
1.01	add positive polarity marking to top of case	08/19/2019
1.02	brand update	12/11/2019
1.03	logo, datasheet style update	08/05/2022

The revision history provided is for informational purposes only and is believed to be accurate.

CUI Devices offers a one (1) year limited warranty. Complete warranty information is listed on our website.

CUI Devices reserves the right to make changes to the product at any time without notice. Information provided by CUI Devices is believed to be accurate and reliable. However, no responsibility is assumed by CUI Devices for its use, nor for any infringements of patents or other rights of third parties which may result from its use.

CUI Devices products are not authorized or warranted for use as critical components in equipment that requires an extremely high level of reliability. A critical component is any component of a life support device or system whose failure to perform can be reasonably expected to cause the failure of the life support device or system, or to affect its safety or effectiveness.